LAGUNA

OWNERS'S MANUAL

Fusion 2 Table Saw

C US
175370

FUSION

© 2022, Laguna Tools, Inc.

Dear Woodworker

Thank you for your purchase and welcome to the Laguna Tools group of discriminating woodworkers. We understand that you have a choice of where to purchase your machines and appreciate the confidence you have in the Laguna Tools brand.

Every machine sold by Laguna Tools has been carefully designed and well thought through from a woodworker's perspective. Through hands-on experience, Laguna Tools is constantly working hard to make innovative, precision products. Products that inspire you to create works of art, are a joy to run and work on, and encourage your performance.

Laguna Tools®
Imagination, Innovation, and Invention at work.

About This Manual

This manual is intended to thoroughly cover the setup up, maintenance, and proper adjustments of your new purchase. Aside from the proceeding general safety considerations, this manual DOES NOT cover woodworking or metalworking techniques that are possible with this product and the appropriate safety precautions necessary for safe practices. There are several organizations with published safe practices, techniques, and proper operation of this tool:

Power Tool Institute
www.powertoolinstitute.com

ANSI 01.1 Safety Requirements for Woodworking Machines
American National Standards Institute
www.ansi.org

warning: *Indicates a possible threat that can result in death to the operator and/or bystanders and cause severe damage to the machine.*

Use Caution: *Indicates a possible threat that will result in minor injury and damage to the machine.*

Tech Tip: *Indicates a technical tip that can help the action, process, or procedure described. The QR Code will be present when applicable content is available.*

Notice: *Indicates important information to the user about questionable subject, objects of importance, or is used to explain an event that may result in unwarranted damage to the machine.*

© 2022, Laguna Tools, Inc.

Table of Contents

Dear Woodworker 2
Warranty and Registration 4
Fusion 2 Tablesaw Specifications 5
General Safety 7
Machine Overview 10
- Controls 10

Setup 11
- Receiving and Unpacking 11
- Inventory 11
- Loose Parts & Overview 12
- General Setup 12
- Installing/Removing the Throatplate 13
- Installing/Removing Safety Accessories 14
- Installing/Removing the Blade 15
- Installing A Dado Set 16
- Cutting A New Zero Clearance Throat Plate (For Dado Set) 16

Adjustments 17
- Fence Adjustments 17
- Table Adjustments 18
- Arbor and Tilt Adjustments 20
- DRO Adjustments and Calibration 20
- Accessory Adjustments 25

Maintenance 27
- Internal Components Map 27

Trouble-Shooting 28
Wiring Diagram: Fusion F2 110V/220V 29
110V/220V Conversion 30
Parts Diagrams 32
- Fence Assembly 32
- Miter Gauge, Blade Guard 33
- Motor and Trunnion 34
- Cabinet 35

Parts List 36

FUSION

© 2022, Laguna Tools, Inc.

WARRANTY & REGISTRATION

THANK YOU!

Welcome to the Laguna Tools® group of discriminating woodworkers. We understand that you have a choice of where to purchase your machines and appreciate the confidence you have in the Laguna Tools® brand.

Through hands-on experience, Laguna Tools® is constantly working hard to make innovative, precision products. Products that inspire you to create works of art, are a joy to operate, and encourage your best work.

Laguna Tools®
Imagination, Innovation, and Invention at Work

WARRANTY & REGISTRATION

Every product sold is warranted to be free of manufacturers' defective workmanship, parts, and materials. For any questions about this product, the intended use or what it was designed for, customer service, or replacement parts, please contact our customer service department:

Laguna Tools® Customer Service
2072 Alton Parkway, Irvine, California 92606, USA
1-800-332-4049
customerservice@lagunatools.com
www.lagunatools.com/why/customer-service/
8AM. to 5PM PST, Monday through Friday

For warranty claims or to report damage upon receiving – please reach out to our warranty department:

Laguna Tools® Warranty Service
2072 Alton Parkway, Irvine, California 92606, USA
1-949-474-1200
customerservice@lagunatools.com
www.lagunatools.com/rpolicies/warranty
8AM to 5PM PST, Monday through Friday

REGISTRATION

To prevent voiding this warranty, all products sold must be registered within thirty (30) days of receiving the product. Registering the product will enable the original purchaser to receive notifications about important product changes, receive customer service, and be able to file a warranty claim against defective workmanship, parts, or materials.

REGISTER HERE!

https://lagunatools.com/policies/warranty/

WHO IS COVERED

The applicable warranty covers only the initial purchaser of the product from the date of receiving the product. To file such claims, the original purchaser must present the original receipt as proof of purchase.

WHAT IS COVERED

The warranty covers any defects in the workmanship of all parts and materials that make up the machine unless otherwise specified. Any part, determined by Laguna Tools®, to have a defect will be repaired or replaced (and shipped), without charge. The defective item/part must be returned to Laguna Tools® with the complaint and proof of purchase in the original packaging that it was received in. In the event the item/part is determined to be not covered by this warranty, the customer will be responsible for the cost to replace the item/part and all related shipping charges.

WARRANTY LIMITATIONS

This limited warranty does not apply to natural disasters, acts of terrorism, normal wear and tear, product failure due to lack of maintenance or cleaning, damage caused by accident, neglect, or lack-of inadequate dust collection. The warranty may be voided against proof of misuse/abuse, damage caused where repair or alterations have been made or attempted by others, using the product for purposes other than those described as intended use (unless with consent by Laguna Tools®), modification to the product, or use with an accessory that was not designed for the product. It is the responsibility of the user to understand basic woodworking machinery settings and procedures and to properly maintain the equipment in accordance with the standards provided in this manual.

LENGTH OF WARRANTY

All new machines and optional accessories sold through an authorized dealer carry a two-year warranty effective the date of receiving the product. Machines sold for either commercial or industrial use have a one-year warranty. Wearable parts like throat plates, bandsaw guides, etc., have a ninety-day warranty.

Table A-1 Warranty Lengths

2 Year – New Machines Sold Through an Authorized Dealer
2 Year – Accessories Sold as Machine Options (excluding blades)
1 Year – Machines Sold for Commercial or Industrial Use
1 Year – Blades and Accessories outside of Machine Options
90 Days – Wearable Parts

Aside from being free of defects upon receiving, consumable parts, like cutters and abrasives, are not covered by this warranty unless otherwise stated by Laguna Tools®. These parts are designed to be used at the expense of the operator and are available for replacement or inventory purchase. The determination of a consumable part will be made on a case-by-case basis by Laguna Tools®.

SHIPPING DAMAGE

Laguna Tools® is not responsible for damage or loss caused by a freight company or other circumstances not in the direct control of Laguna Tools®. All shipping-related claims for loss or damage goods must be made to Laguna Tools within twenty-four hours of delivery.

HOW TO RECEIVE SUPPORT

To file a warranty-claim please contact the warranty department at 1-949-474-1200. To receive customer service or technical support please contact the customer service department at 1-800-332-4094. Parts, under warranty, are shipped at the expense of Laguna Tools® either by common carrier, FedEx ground services or similar method. Technical support to install replacement parts is primarily provided by phone, fax, email, or the Laguna Tools Customer Support Website.

LAGUNA

© 03/2018, Laguna Tools, Inc.

© 2022, Laguna Tools, Inc.

Fusion 2 Tablesaw Specifications

NAME & MODEL	Name	Fusion 2 Tablesaw
	SHORT SKU	MTSF2
	UPC	650434695558
	Stock Model	MTSF236110175-0130
	w/ 52" Rip	MTSF252110175-0130
NCLUDED WITH PURCHASE	Professional Square Zero Clearance Throat Plate (pre-installed)	
	10" 40T Blade (pre-installed)	
	Riving Knife (pre-installed)	
	Miter Gauge (ships in tool holder)	
	Tool Holder (pre-installed)	
	Fence	
	Blade Guard	
	Arbor Wrench	
	Installation and Adjustment Tools	
ELECTRICAL	Phase	1PH
	Voltage	115V (Wired) / 230V*
	Motor Type	TEFC Capacitor Start AC Induction
	Horsepower	1-3/4 HP
	Motor Speed	3450 RPM
	Cycle	60 Hz.
	Full Load Amperage	14 Amp. / 7 Amp.
	Start Capacitor	200 µF-U
	Run Capacitor	35 µF-U
	Switch Type	Magnetic
	Power Transfer	Single V-Ribbed Bando 142J FJ
	Power Cord	6' / 14 AWG
	Power Plug Included	N5-15
	NEMA Breaker Recommendation	20 Amp.
	Note:	***220V option will require the purchase of 220V switch, plug and cord**
GENERAL	Footprint (LxW)	18-5/8" x 19-1/4" (cm: 46.04, 48.26)
	Overall Dimensions (LxWxH)	39-3/4" x 65-5/8" x 38" (cm: 100.01, 166.69, 96.52)
	Shipping Dimensions (LxWxH)	29-3/4" x 46-5/8" x 42-5/8" (cm: 75.57, 118.43, 108.27) Net
	Weight (No Accessories)	276 Lbs. (125 Kg)
	Shipping Weight	359 Lbs. (163Kg)
	Dust Collection: Outlet Dia.	4"
	Dust Collection: CFM Min. Req.	500 CFM
	Sound Emissions	N/A
TABLESAW SPECIFIC	Max Blade Diameter	10"
	Arbor Diameter	5/8"
	Arbor Speed	4500 RPM
	Max Dado Diameter	8"
	Max Dado Width	13/16"
	Rip Capacity, with Fence	36" Right, 17" Left
	Maximum Depth of Cut @ 90°	3 1/8"
	Maximum Depth of Cut @ 45°	2 1/8"
	Blade Tilt	45° Left, 3° Arbor Adjustment
	Table Dimension, with Extensions (LxWxH)	27" x 44" x 1-1/2" (cm: 68.58, 111.76, 3.81)
	Extension Wing Dimension (LxW)	27"L x 12"W (cm: 68.58, 30.48)
	Miter Slot	3/4" to 1" T
	Fence Type	Sliding Cam Action Fully Adjustable
	Fence Face Dimensions (LxWxH)	33-3/8" x 2-1/2" x 1/2" (cm: 84.77, 6.35, 1.27)

© 2022, Laguna Tools, Inc.

Throat Plate Type	Professional Square Zero Clearance
Throat Plate Dimensions (LxWxH)	14-5/8" x 4-1/16" x 1/2" (cm: 37.15, 10.32, 1.27)
Floor to Table Height	34-3/4" (88.27cm)

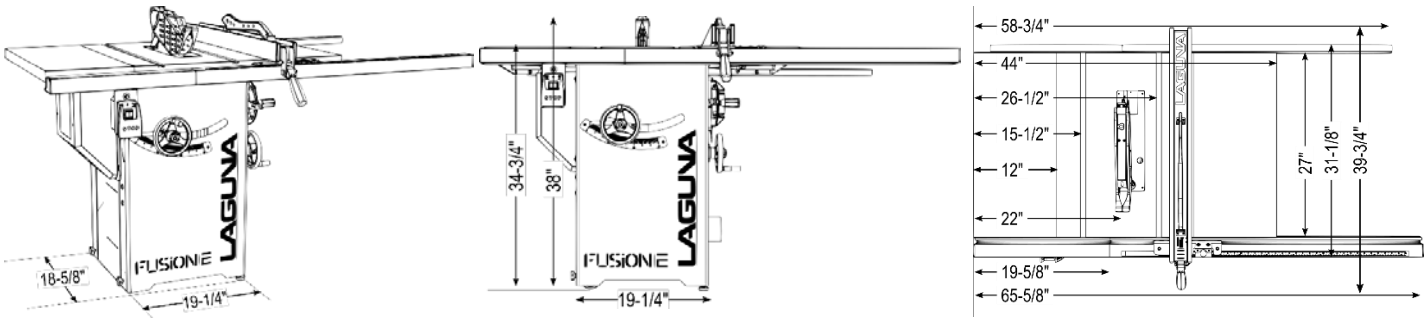

TOP 10 FEATURES

Newly designed precision arbor mounted directly to cabinet top. Height adjustment moves straight up easily with mechanical assist. Arbor tilt is now on 2:1 ratio gear box. The new Laguna Arbor is Sturdy and built to last.
Perfectly flat and precision ground mirror finished tabletop.
Designed for user adjustability. Every accessory and control is adjustable to ensure the saw is accurate.
Quick release blade guard attachments.
Quick Arbor Adjustments with the 2:1 assisted tilt mechanism and mechanically assisted height adjustments.
Quick blade changes with the push button blade lock.
Single poly V-Ribbed belt and double sealed large bearings.
Reliable totally enclosed fan cooled AC Induction motor.
Powder coated Laguna black body and shrouded dust control.
Integrated mobility.

Accessories

Fusion 52" Rip Capacity Expansion Table	MTSFUSION52RIP-0130
Fusion Professional Zero Clearance Throat Plate	PTSF236110175-0130-6

Many more to come! check LagunaTools.com

Blades

10" Alternate Top Bevel 60 Tooth	AT00110060
10" Alternate Top Bevel 80 Tooth	AT00110080
10" Triple Chip Bevel 60 Tooth	AT00210060
10" Triple Chip Bevel 80 Tooth	AT00210080
10" Combination 50 Tooth	AT00810050
10" Glue Line Rip 24 Tooth	AT00710024
8" Dado Set	AT1200840

© 2022, Laguna Tools, Inc.

General Safety

warning: *Read all safety considerations. Failure to follow this set of guidelines can result in unwarranted damage to the machine and serious injury to the operator and bystanders.*

Work area

KEEP ALL CHILDREN AND UNTRAINED PERSONS AWAY FROM THE MACHINE. Do not allow bystanders to touch the machine or power cord.

All people but the operator should be away from the work area.

KEEP WORK AREA CLEAN. A cluttered area can limit the range of motion needed by the machine and cause serious injury to the operator or damage to the machine.

MAKE SURE THE WORK AREA IS CHILD-PROOF AND UNACCESABLE TO UNTRAINED PERSONS. Use padlocks where possible and keep all machines unplugged when not in use.

DO NOT KEEP OR PLACE TOOLS IN OUTDOOR, DAMP, OR DANGEROUS ENVIRONMENTS. Never operate the tool under wet or damp conditions; there is a serious risk of electrical shock. Exposing this product to those environments may result in damage to the tool and operator injury. Do not use tool in the presence of flammable liquids or gasses.

Personal Safety

KNOW YOUR MACHINE. Read and understand the owner's manual and labels affixed to the tool. Learn its application and limitations as well as the specific potential hazards peculiar to this tool.

DRESS PROPERLY. Do not wear loose clothing or jewelry. Do not wear gloves that can be caught in the cutter-head or power feeder or any part of the machine. Tie up or wear protective coverings to contain long hair.

USE SAFETY GOGGLES. Some machines require additional face shielding than offered by safety goggles alone. Know your machine and the proper PPE to use.

USE EAR PROTECTION. Some machines operate at very high noise levels. To prevent harm, be sure to use ear protection always.

GUARD AGAINST ELECTRIC SHOCK. Prevent all bodily contact with grounded surfaces and parts of the machine that pose electrical threats.

DO NOT OVERREACH THE CUTTER HEAD OR BLADE. DO NOT STAND ON THE MACHINE. Serious injury can occur from mishandling this tool. Keep proper footing on the floor at all times.

AVOID ACCIDENTAL STARTING FOR MACHINES WITHOUT MAGNETIC OR AUTOMATIC SHUT-OFF SWITCHES. Make sure the tool is in the off position prior to plugging it in.

KEEP GUARDS IN PLACE. Machine parts like riving knifes, blade guard, cutter-head guards, feather boards, push sticks, etc. are designed to minimize possible injury. Keep those parts in place unless a safer means

of operation is available.

BE ALERT ALWAYS AND GIVE 100% OF YOUR ATTENTION TO THE OPERATION OF THIS TOOL. Failure to do so can result in serious injury to both the operator and bystanders.

DO NOT RELY ON GUARDS. The operator of this tool is 100% responsible for his/her own safety. The guards and safety components sold with this machine are not enough to ensure safety.

CHECK FOR DAMAGED PARTS. Before every use of this tool, makes sure the machine and any components of the machine are not damaged or at the risk of being damaged. If a damaged part is discovered, stop immediately and put the machine out of service until the part is replaced. Parts can be ordered directly from Laguna Tools at: 1-949-474-1200.

Tool Use

DO NOT FORCE TOOL. The tool is designed to operate at a certain feed rate determined by cutter. Forcing the workpiece beyond that rate will do an inadequate job and may cause damage or harm to the operator.

USE THE CORRECT TOOL FOR THE JOB. Know the limitations and capabilities of your new purchase. Do not try to "fit a square peg in a round hole."

SECURE THE WORK PIECE. For all woodworking and metalworking applications, the workpiece should be secured correctly by the operator using appropriate clamps and vises. Always use a clamp or vise when available — it is safer than using your hands.

FEED DIRECTION. If feed rate is applicable, then there is only one direction of feed rate for the tool. Do not force the workpiece in the wrong feed direction.

KEEP CUTTERHEADS AND BLADES SHARP. Never operate this machine with unsharpened cutter heads or blades. Operating under these conditions greatly increases the chance of kickback and overloads.

NEVER LEAVE TOOL RUNNING UNATTENDED. Do not leave the tool until it comes to a complete stop. When unattended, unplug the tool.

warning: *All repairs should be done by trained repairmen. Contact Laguna Tools or a competent repair service.*

warning: *Use only Laguna Tools or compatible and marked replacement parts. All others may cause damage or harm.*

warning: *Use only manufacturer-recommended accessories. Some accessories may cause damage or harm.*

Kickback

A kickback happens when the workpiece binds between the saw blade (or cutter head) and a stationary object (fence). KICKBACKS CAN USUALLY BE AVOIDED BY FOLLOWING THESE GUIDELINES:

1. *Make sure the fence is always parallel to the saw blade.*
2. *When ripping, apply the feed force to the section of the workpiece between the sawblade and the rip fence.*
3. *Keep the sawblade or cutter heads sharp. Replace or sharpen anti-kickback pawls when points become dull.*
4. *Keep guards, spreaders and anti-kickback pawls in place and operating properly. The spreader must be in alignment with the sawblade and the pawls must stop a kickback once it has started. Check action prior to use.*
5. *NEVER try to rip a workpiece that is twisted or warped or does not have a straight edge to guide along the rip fence.*
6. *NEVER release the work until you have pushed it all the way past the sawblade or cutter head.*
7. *Always use the appropriate push stick or push blocks.*
8. *NEVER confine the cut-off piece when ripping or cross cutting.*
9. *NEVER process multiple loose workpieces at one time.*

© 2022, Laguna Tools, Inc.

General Safety

Electrical

DISCONNECT THE POWER FIRST. Always disconnect machine from power supply BEFORE adjusting, changing tooling, or servicing machine.

USE A QUALIFIED ELECTRICIAN FOR ALL ELECTRICAL CONNECTIONS. Failure to do so may result in damage to the tool and electrical shock to the operator and bystanders.

POWER PLUGS. Your machine may not come with a power plug because of the variance in power receptacles. Consult with a local electrician prior to purchasing a power plug.

EXTENSION CORDS. Consult with or use a qualified electrician prior to sizing extension cords for use with this machine. Repair any damaged extension cords when discovered. The following table should only serve as a guideline to choosing the appropriate extension cord.

		A.W.G CORD SIZE			
TOOLS AMPERAGE RATING	VOLTS	CORD LENGTH IN FEET			
	120	25	50	100	150
	240	50	100	200	-
3-6		18 ga.	16 ga.	16 ga.	14 ga.
6-8		18 ga.	16 ga.	14 ga.	12 ga.
8-10		16 ga.	14 ga.	12 ga.	12 ga.
10-12		14 ga.	14 ga.	12 ga.	10 ga.
12-16		14 ga.	12 ga.	-	-.
16-20		12 ga.	12 ga.	-	-

Note: The smaller the AWG gauge (ga.) size, the wider the cord.

Grounding

In the event of a malfunction, properly grounding the tool provides a path for electric charge to dissipate in a safe manner.

DO NOT MODIFY THE PLUG. Do not remove any of the prongs attached to the proper plug for the machine.

USE ONLY 3-WIRE EXTENSION CORDS. Some extension cords only have two wires, which does not allow for grounding.

ALLWAYS USE GROUNDED CONNECTIONS. Connect to power sources only in the following ways:

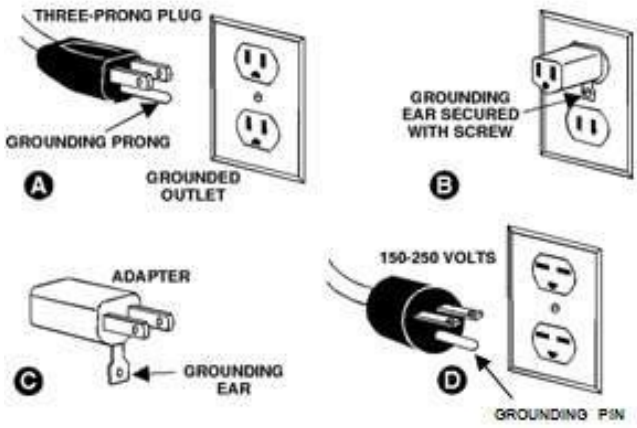

Rulings

warning: *Before connecting this tool to a power supply (receptacle, outlet, etc.) make sure that the voltage supplied is the same that is specified on the nameplate of the tool.*

Also make sure that the power supply is equipped with the appropriate breaker and plug according to your local electrical code.

IF IN DOUBT, DO NOT PLUG IN THE MACHINE. Using this tool with a voltage different than that stated on the nameplate can damage the electrical components of this machine and any such damage will not be covered by a warranty.

warning: *Some dust created by power sanding, sawing, grinding, drilling and other construction activities contains chemicals known to cause cancer, birth defects or other reproductive harm. Some examples of these chemicals are:*

- *Lead from lead-based paint.*
- *Crystalline silica from bricks, cement, and other masonry products.*
- *Arsenic and chromium from chemically treated lumber.*

Your risk of exposure varies, depending on how often you do this type of work. To reduce your exposure to these chemicals, work in a well-ventilated area and work with approved safety equipment, such as face or dust masks that are specifically designed to filter out microscopic particles.

A notice about safety and Tool Use

The tools sold by Laguna Tools are safe when used properly, described by The American National Safety Institute, the UL Standards of safe tool use, and the IEC standards of safe tool use. Laguna Tools is in no way responsible for injury or death that occurs while using this product. YOUR PERSONAL SAFTEY IS 100% YOUR RESPONSIBILITY AND USING THIS PRODUCT REQUIRES 100% OF YOUR ATTENTION.

If there is any concern related to the application you are intending to use this tool for, DO NOT proceed until you have contacted Laguna Tools and have been advised on the correct application of the product. You can easily contact us by email at customerservice@lagunatools.com or by calling 1-800-234-1976.

This manual is intended to thoroughly cover the setup up, maintenance, and proper adjustments of your new purchase. Aside from the proceeding general safety considerations, this manual DOES NOT cover woodworking or metalworking techniques that are possible with this product and the appropriate safety precautions necessary for safe practices. There are several organizations with published safe practices, techniques, and proper operation of this tool.

Power Tool Institute
www.powertoolinstitute.com

ANSI 01.1 Safety Requirements for Woodworking Machines
American National Standards Institute
www.ansi.org

© 2022, Laguna Tools, Inc.

Machine Overview

Your new Laguna Tools machine is comprised of different components to make a long lasting and precise piece of machinery that will help you with your next project. Understanding your new machine and its components will make you a better craftsman.

The basic components of the table saw are:

1. Start/Stop Control Switch
2. Rip Fence
3. Fence Front Guide
4. Fence Rear Guide
5. Table with Miter Slots
6. Cabinet with integrated mobility kit
7. Arbor Height adjustment control
8. Arbor Tilt adjustment control
9. Dust Extraction outlet.
10. Motor Cover
11. Tool Holder
12. Throat Plate
13. Blade
14. Blade Guard
15. Riving Knife
16. Arbor Wrench
17. Miter Gauge

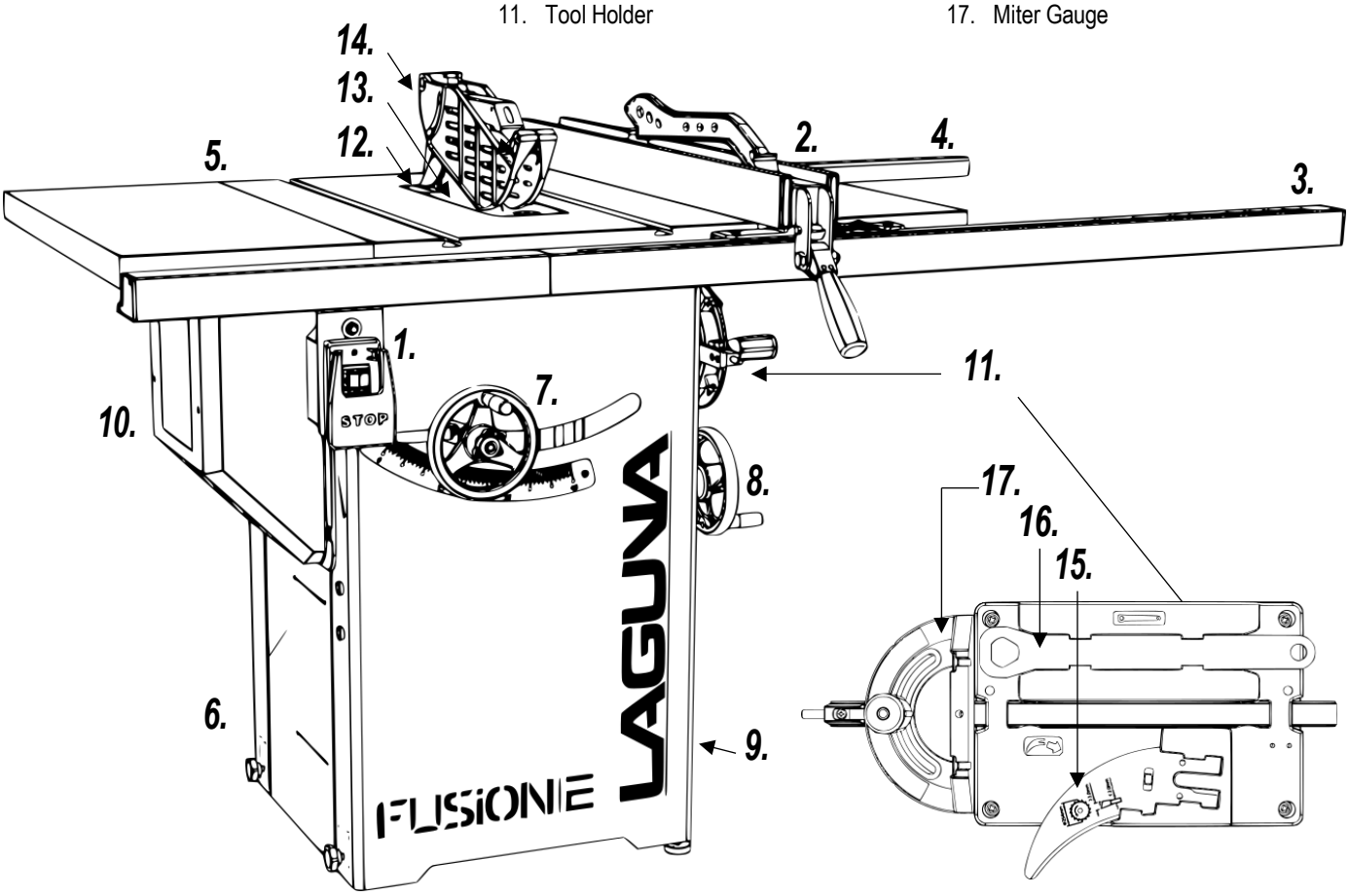

Controls

Start/Stop

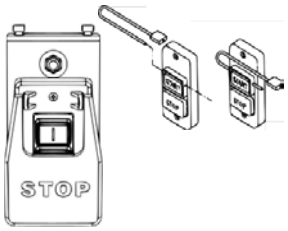

The lockable on/off switch turns the machine on and off. It also holds the reset switch* in the event of overload.

F3 OVERLOAD RESET LOCATED ON CONTACTOR

Arbor Height Control & Tilt gauge

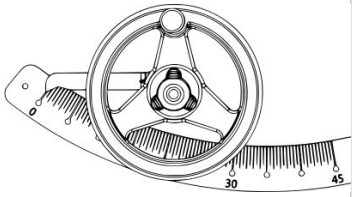

The arbor height control adjusts the height of the blade. Centered in the control is the height adjustment lock. Behind the control is the tile gauge. CW to raise, CCW to lower blade.

CAUTION: DO NOT ADJUST HEIGHT WHEEL WHEN LOCKED.

Arbor Tilt control

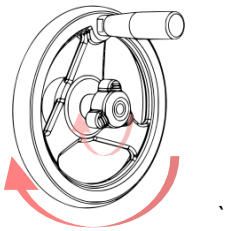

The tilt control, located on the right of the cabinet, adjusts the tilt of the arbor. Center is the tilt lock. CW to tilt left, CCW to tilt the blade to the right. ***CAUTION: DO NOT ADJUST TILT WHEEL WHEN LOCKED.***

Fence clamp lock

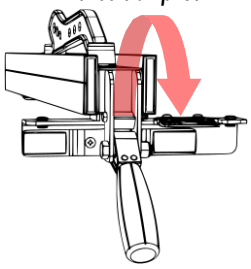

The fence clamp securely locks the fence anywhere on the rail by a cam action mechanism.

© 2022, Laguna Tools, Inc.

Setup

Use Caution: *Your new Laguna Tools machine is heavy. Use a minimum of two people when lifting the tool into position and moving the tool into position.*

warning: *To avoid set-up problems, to prevent potential damage to the machine and personal injury, read through the entire setup section prior to setting up the machine.*

Tech Tip: *A setup video is available at* lagunatools.com/classic-machinery/tablesaws/f2-fusion/ *or* www.youtube.com/watch?v=FOPstZ61uFs

warning: *DO NOT connect to a power supply until the setup is complete. DO NOT perform any of the following steps, installations, or adjustments with the saw connected to the power source.*

Receiving and Unpacking

If any damage has occurred because of shipment, note the damage on the bill of lading or refuse the shipment. Immediately call the dealer store where the machine was purchased.

1. Receiving your tablesaw.
2. Unscrew the crate fasteners.
3. Lift crate off pallet.
4. Check Inventory.
5. Wipe off protective oils.

Receiving your tablesaw

This is how the machine is shipped from the factory.

Unscrew the crate fasteners

Use a drill or screw driver with a #2 Phillips head bit and remove the bottom screws from carton. These screws may be discarded.

Lift crate off pallet

Use two persons to lift the carton away from the pallet. There should be three packages along with the tablesaw.

NOTE: The throat plate, riving knife, and 10" blade is pre-installed in the machine. The miter gauge, and blade changing tool are positioned in the tool holder located on the right side of the cabinet.

Check Inventory

1. Fence, install tools, push stick, blade guard assembly
2. Smaller fence rail sections, hardware kit
3. Longer fence rail sections.

Wipe off protective plastics

Peel back the protective vinyl plastic and wipe away the oil with a waste rag.

Use Caution: *An oily rag can be a serious fire hazard. Discard in an appropriate manner.*

Tech Tip: *To help keep your tabletop clean and to prevent or clean any rust, we recommend waxing your tabletop with an appropriate wax rubbing compound. This will also reduce friction under operation. Rust can be removed with WD-40.*

Inventory

Box 1 contents	
Fence	PTSF236110175-0130-1-1
Push Stick	PTSF236110175-0130-130
Blade Guard	PTSF236110175-0130-2-1
Install Tools	-
Fence Hooks*	PTSF236110175-0130-118

***Fence storage hooks may be pre-installed.**

Box 2 contents	
Rear Rail 2	PTSF236110175-0130-127.5
Front Rail 2	PTSF236110175-0130-127.6
Hardware kit	-

Box 3 contents	
Rear Rail 1	PTSF236110175-0130-127.5
Front Rail 1	PTSF236110175-0130-127.6

Pre-Installed on machine	
Throat Plate	PTSF236110175-0130-6
Riving Knife	PTSF236110175-0130-27
10" Blade	PTSF236110175-0130-33
Miter Gauge	PTSF236110175-0130-3
Arbor Wrench	PTSF236110175-0130-137
Tool Storage	PTSF236110175-0130-120
Wing (2)	PTSF236110175-0130-4

Notice: *The front rail part number is comprised of two pieces – both long and short. The rear rail part number is comprised of two pieces – long and short.*

NOTICE: ***For safety reasons, this machine is not sold with a tape-rule for the left side of the blade. It is not a missing part.***

© 2022, Laguna Tools, Inc.

Loose Parts & Overview

Your new machine has been mostly assembled at the certified ISO 91001 factory where it was made. Some parts must be assembled by the purchaser. Please read all steps first before proceeding with step one.

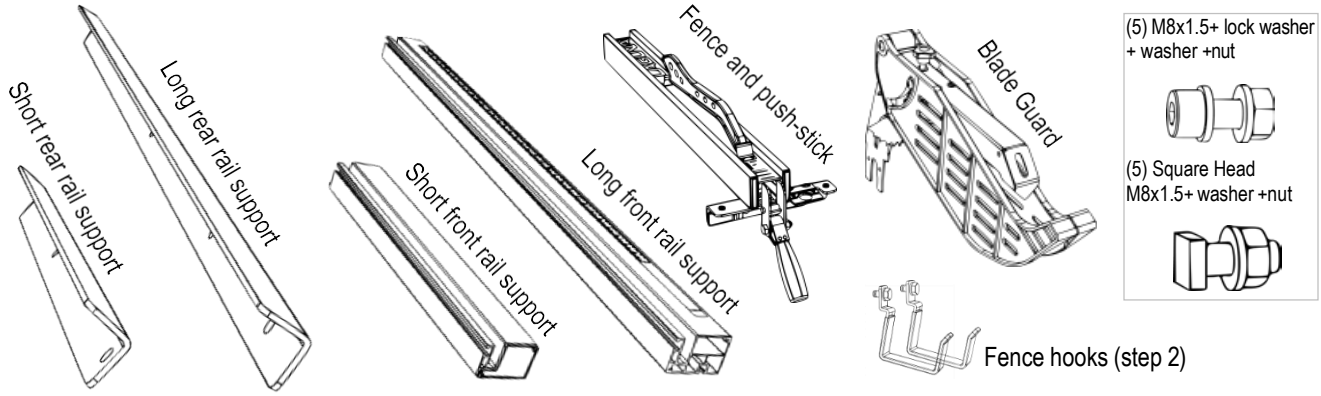

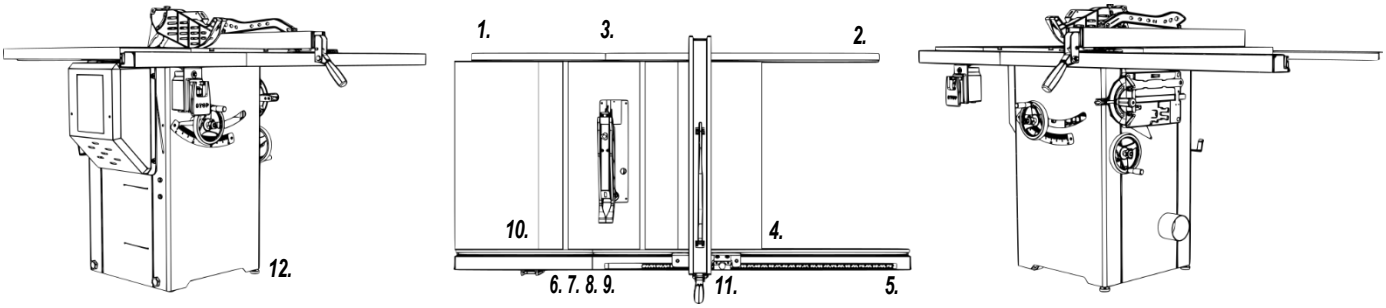

[See explanation of steps on the following pages.]

General Setup

1. Attach the short rear fence support
2. Attach the long rear fence support
3. Level the rear rails and fasten
4. Attach T-Slot bolts to front table
5. Insert long front rail fence support
6. Insert short front rail and switch
7. Join front fence supports
8. Align the entire front rail to blade mark
9. Level and fasten the front rail
10. Insert fence
11. Level the saw by adjusting casters

1. Attach short rear fence support

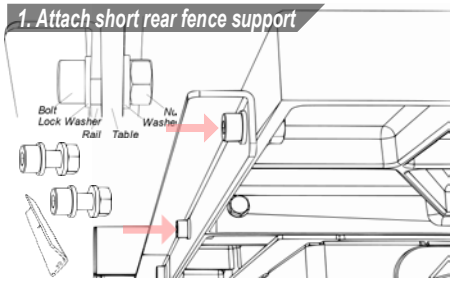

Use the supplied wrench and Alan key to loosely fasten (2) bolts, lock washers, washers, and nuts to the short rear fence guide and the back left of the table. **STOP BEFORE TIGHTENING:** Keep bolts loose until entire rail assembly is in place to properly level rail.

2. Attach long rear fence support

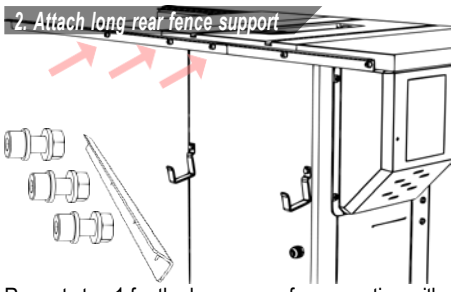

Repeat step 1 for the longer rear fence section with (3) bolts, lock washers, washers, and nuts. Use the same assembly diagram in Step 1.
NOTICE: If the fence hooks are not yet installed, now is a good time to do so.

3. Level the rear rails and fasten

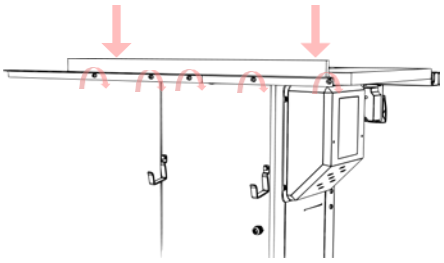

To level the rear fence with the table top, place a ridged straight edge on top of the rails. Apply downward force at both arrow indicators and simultaneously tighten the bolts with the supplied Allen key and wrench.

4. Attach T-slot bolts to front table

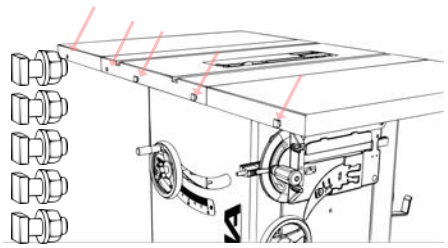

Loosely fasten the (5) square headed bolts, (5) washers, and (5) nuts. A couple revolutions of the bolt will be tight enough. Prepare to insert the (2) aluminum front rail sections.

5. Insert the long front fence support

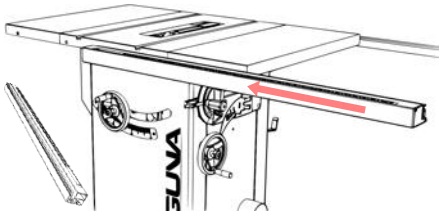

Insert the long Front Rail. **STOP BEFORE TIGHTENING:** Keep these bolts loose until the entire rail assembly is in place to properly level the rail.

© 2022, Laguna Tools, Inc.

6. Insert short rail and switch

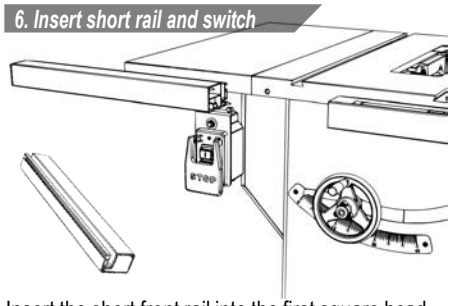

Insert the short front rail into the first square head bolt. **IMPORTANT:** Insert the switch assembly before joining the two front rail pieces. **STOP BEFORE TIGHTENING.**

7. Join front fence supports

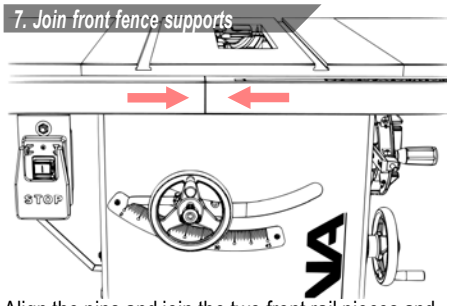

Align the pins and join the two front rail pieces and firmly push together.

8. Align the front rail with blade

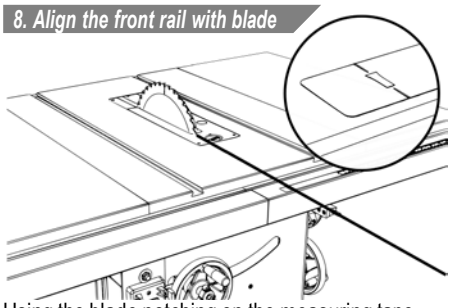

Using the blade notching on the measuring tape, align the entire front rail section to the blade.

9. Level and fasten front rail

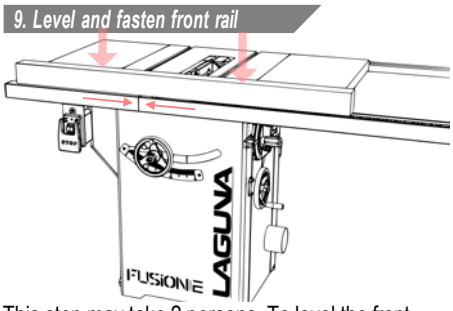

This step may take 2 persons. To level the front rail sections to the table top, use a ridged straight edge atop the loosely fit rail sections. Apply downward force to the straight edge while keeping the two sections firmly together. Simultaneously fasten down the bolts.

10. Install the fence

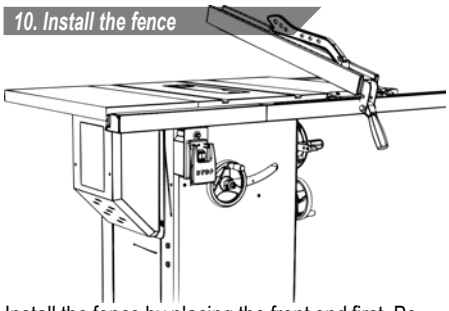

Install the fence by placing the front end first. Be sure that the handle is in the open, unlocked, position prior to installing.

11. Level the tablesaw with casters

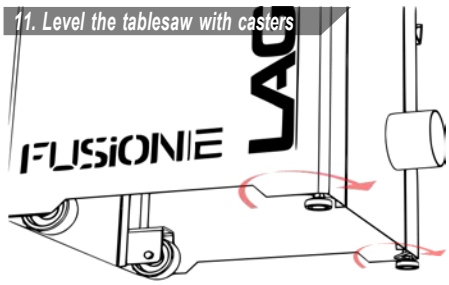

To level the tablesaw with the ground, use the two leveling casters. The knobs on the left lock the mobility of the saw.

Installing/Removing the Throatplate

1. Un-plug the tablesaw!
2. Insert the throat plate back end first.
3. Lower the throatplate to the table.
4. Lock the throat plate with the thumb-lock.
5. Level the throatplate with the table using the cat screws.

Notice: *This machine is shipped with a zero-clearance throat plate that has already been cut at the factory. Because of this, there may be some residue already in the saw.*

Installing the throat plate

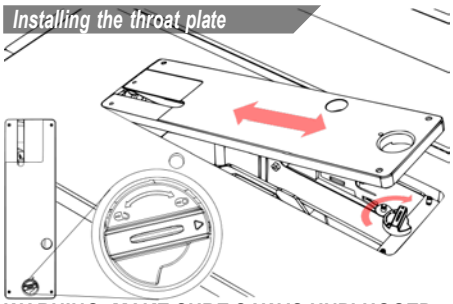

WARNING: MAKE SURE SAW IS UNPLUGGED. To remove or install the throat plate, first set it to the unlock position. The n, insert the rear end first and tilt the other end down into position.

Leveling the throat plate

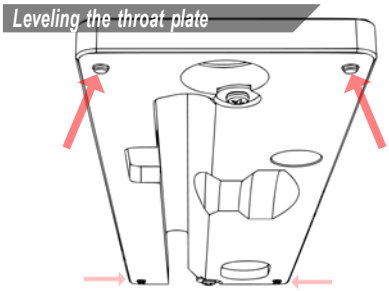

To level the throatplate, adjust the leveling screws.

Use Caution: *Make sure the throat plate is lower than the cast iron table. Having the throat pla te higher at any position can interfere with the workpiece feed and cause injury or harm and increase the chance of kickback.*

© 2022, Laguna Tools, Inc.

Installing/Removing Safety Accessories

A: Saw blade
B: Accessory insert block
C: Cam action lever

D: Riving knife
E: Splitter with anti-kickback pawls
F: Blade Guard

G: Adjustment Screws
H: Blade Compliant Markings

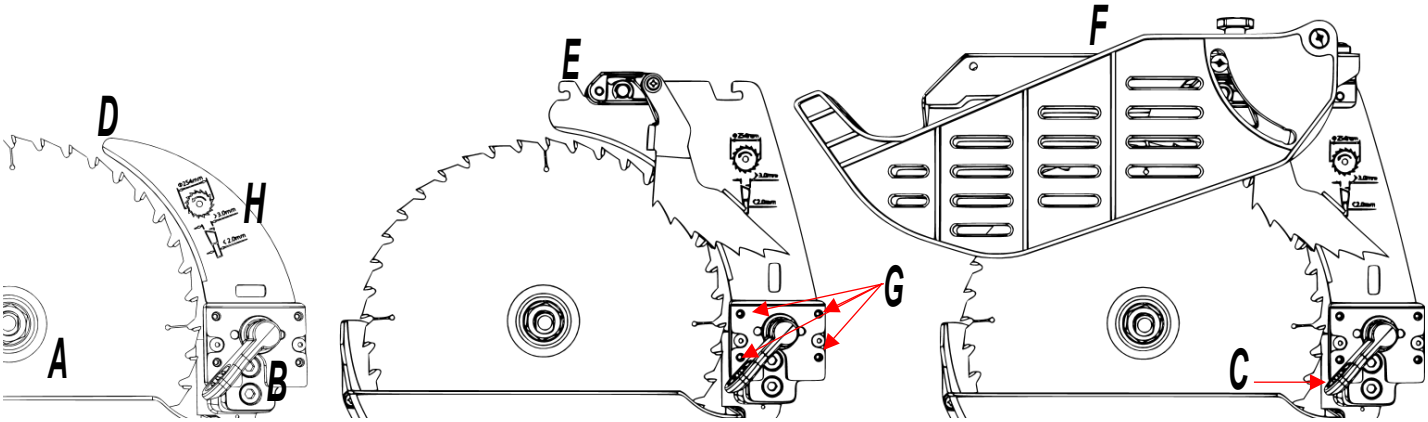

Installing/Removing the Riving knife

1. Un-plug the tablesaw!
2. Make sure the lock is in open position
3. Insert the riving knife
4. Position the riving knife to left side of case
5. Lock the riving knife
6. Reinstall throat plate

CAUTION: Make sure the riving knife is in-line with the blade. If it is not in line, please see the Adjustments Section.

WARNING: MAKE SURE SAW IS UNPLUGGED. With the saw unplugged, throat plate removed, and the cam lock mechanism in the open position (pulled up), insert the riving knife into the slot.

Position the riving knife against the left inside of the casing and push down. Make sure the knife is positioned correctly and seated in the bottom of the casing. Keep right hand free for next step.

Keep firm hold of the riving knife with left hand and engage the cam lock with the thumb of your right hand.

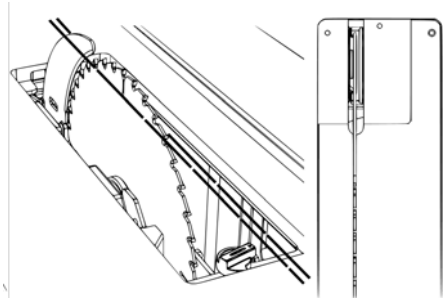

CAUTION: Make sure the riving knife is in-line with the blade. If it is not in line, please see the Adjustments Section.

Use Caution: *Make sure to inspect the riving knife frequently. Do not operate with a bent or nicked riving knife.*

Only use the riving knife with sawblades that satisfy blade compliant markings on the side of the knife.

© 2022, Laguna Tools, Inc.

Installing/Removing the Blade Guard

1. Un-plug the tablesaw!
2. Make sure the lock is in open position
3. Insert the blade guard
4. Position the guard insert
5. Lock the blade guard
6. Reinstall throat plate

CAUTION: Make sure the blade guard is in-line with the blade. If it is not in line, please see the Adjustments Section.

WARNING: MAKE SURE SAW IS UNPLUGGED. With the throat plate removed, and the cam lock mechanism in the open position (pulled up), insert the blade guard insert into the slot.

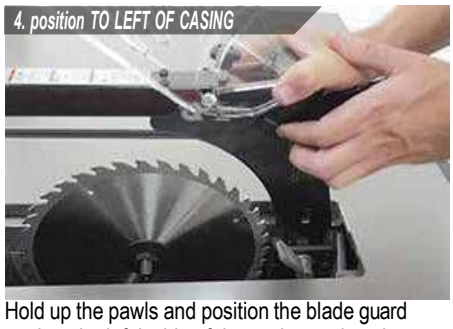

Hold up the pawls and position the blade guard against the left inside of the casing and push down. Make sure the guard is positioned correctly and seated in the bottom of the casing. Grasp the pawls with one hand, leaving the other hand free to activate the cam action lock.

Keep firm hold of the blade guard with left hand and engage the cam lock with the thumb of your right hand.

Grasp the pawls up and out of the way to re-insert the throat plate. Lock the throat plate.

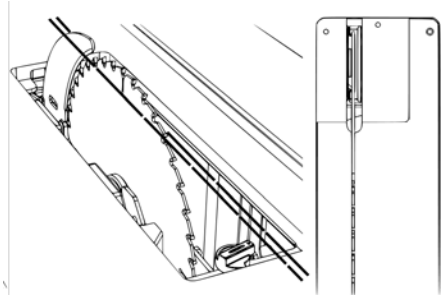

CAUTION: Make sure the riving knife is in-line with the blade. If it is not in line, please see the Adjustments Section.

Installing/Removing the Blade

1. Un-plug the tablesaw!
2. Remove any blade guards, riving knifes, splitters, and the throat plate to access the blade.
3. Set the arbor tilt to 0 degrees and lock.
4. Raise saw to highest position.
5. Engage blade lock (red component).
6. Remove the arbor nut and flange with arbor wrench.
7. Remove or install blade.

CAUTION: Make sure the teeth of the blade are facing the front of the saw as shown.

WARNING: MAKE SURE SAW IS UNPLUGGED. To access the blade remove all accessories around the blade, including riving knifes, throat plates, ect.

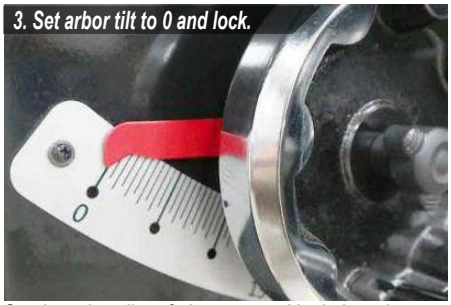

Set the arbor tilt to 0 degrees and lock the arbor to prevent it from moving when installing or removing blades.

Raise the saw to the highest position to use the red blade lock and arbor wrench to remove the blade.

With the blade in the highest position, engage the blade lock by pressing in with left thumb. Slowly rotate blade to engage lock.

Grasp the pawls up and out of the way to re-insert the throat plate. Lock the throat plate.

© 2022, Laguna Tools, Inc.

Installing A Dado Set

1. Un-plug the tablesaw!
2. Remove any blade guards, riving knifes, or throat plates to access the blade.
3. Set the arbor tilt to 0 degrees and lock.
4. Raise saw to highest position.
5. Insert dado blade and chippers as shown.
6. Tighten down arbor nut with arbor wrench.
7. Re-install and lock the dad throat plate.

CAUTION: Make sure the teeth of the blade are facing the front of the saw as shown.

WARNING: MAKE SURE SAW IS UNPLUGGED.

Install dado set as shown to prevent chipper jamming.

Cutting A New Zero Clearance Throat Plate (For Dado Set)

Uncut zero clearance throat plates are available for purchase. This is a dangerous process; safety glasses and extreme caution are required. **WARNING:** Make sure the throat plate is locked and not able to move by adjusting the set screws. **WARNING:** Make sure to remove blade accessories during this procedure as they can interfere, set the cam action lock to the lock position.

1. Un-plug the tablesaw!
2. Set tilt to zero degrees and lock.
3. Remove throat plate, riving knife, blade guard, or splitter.
4. With the blade installed set the arbor height to the lowest position.
5. Install the new throat plate.
6. Lock the throat plate and adjust the set screws such that the throat plate has zero play and is solid with the table.
7. Plug in the tablesaw.
8. **SLOWLY** rise the blade in and through the throatplate to the desired clearance.
9. Re-adjust the throat plate back to operation height.

WARNING: MAKE SURE SAW IS UNPLUGGED. With the saw unplugged, set the arbor tilt to 0 degrees and lock the arbor tilt mechanism so it cannot move. It is wise to double check that the blade is 90 degrees to the table if this is a new saw. Set arbor height to lowest position and install new throat plate.

Lock the throat plate in position and screw in the Alan set screws so that the table tries to force away and comes in contact with the locking mechanism. This will ensure that the throat plate will not move and stays in the same location during the next steps.

Give power to the table saw and **SLOWLY** raise the blade through the new throat plate. **NOTICE:** Use a respirator! Cutting the throatplate may contain particles that are harmful to the human body.

As the blade rises, the throatplate section will cut away. Stop the process at the desired blade height for application with the blade or dado set.

Finished process.

© 2022, Laguna Tools, Inc.

Adjustments

Your Laguna Tools machine comes fully adjusted from the factory, but it is good practice to double check these adjustments and make sure the tool is in safe operating condition.

Fence Adjustments

Fitting the fence:

You will need to fit the fence to the right side of the blade to use the table saw. In the fit position, the fence can move freely with limited friction due to the installed nylon and plastic glide bushings. The fence should not, at any times be used on the left side of the blade.

1. Un-plug the tablesaw!
2. Hold fence with both hands, with cam lock up.
3. Place fence in fence guide
4. Check cam lock action, adjust if necessary.

2. Place fence in fence guide

While holding the fence and the cam lock, raise the cam lock to engage the open position. Insert the fence frame into the front rail.

Check Cam lock action

The fence can slide freely in any position to the right of the blade. If the fence does not lock, adjust both blade paralleling set screws (located on the back of the fence frame as shown) at the same rate, as needed.

Adjusting the Scale (rule):

The scale will need to be “zeroed” every time the fence guide is taken off the table or adjusted. The fence must be zeroed for accurate cuts when using the scale.

1. Un-plug the tablesaw!
2. Position the fence up to blade.
3. Loosen the transparent viewport.
4. Adjust the view as needed
5. Tighten the view screws.

Place fence in fence guide

WARNING: MAKE SURE SAW IS UNPLUGGED. With the blade in a high position, bring the fence close to — but not touching — the blade. Use a folded piece of paper between the blade and the fence to ensure good distance.

Adjust the Viewport

Use a #2 Philips head driver to loosen (but do not remove) the transparent scale reader. Adjust the viewport as needed, tighten the screws. **NOTICE:** If adjusting the viewport does not allow enough to zero the scale, see step 8 of general setup.

Adjusting the Fence Glide Bushings:

You may need to adjust the height of the bushings on either side or rear of the fence. The fence should be between 1/16” and 1/8” off the table to prevent scratches and not to allow any thin stock to slip through.

1. Un-plug the tablesaw!
2. Unlock the fence.
3. Use a hex key to adjust the front bushing height.
4. Use a wrench to adjust the rear bushing height.

Front Bushings

To adjust the front bushings, use the included hex key to raise or lower the nylon bushings that make contact with the front fence rail.

Rear Bushings

To adjust the rear bushing, loosen the hex nut that locks the height position of the bushing. Adjust the position and tighten the hex nut.

© 2022, Laguna Tools, Inc.

Adjusting the Fence to be Parallel with the Blade:

It is very important to only operated this saw with the blade parallel to the fence. **NOTICE:** If this section does not help, please see the table adjustments section: Adjusting the Table to be Parallel with the Blade. The blade needs to be parallel to the table (mitre slots) to effectively make the fence parallel to the blade.

1. Un-plug the tablesaw!
2. Position the fence to access the fence adjustment screws.
3. Use a hex key to adjust each side
4. Make small increments and check

Use Caution: *It is not guaranteed that the fence will be parallel to the saw blade when shipped from factory. Make sure to make all required adjustments to make the fence parallel to the saw blade prior to operation.*

Position fence to access adj. screws

WARNING: MAKE SURE SAW IS UNPLUGGED. Take the fence out of position and flip it on its back side to access the cat screws that push the nylon supports in/out.

Use a hex key to adjust

Use the included hex key to adjust the depth of each nylon support. Do small increments and check.

Table Adjustments

Adjusting the Table to be Parallel with the Blade:

It is good practice to make sure that the table is always parallel to the blade by checking it often. You can do this with a combination square or with a dial indicator on an appropriate mount. There are several dedicated tools to do this job well like the Saw Gauge sold by WoodPeckers®.

Good

A Combination Square. Notice: This method may leave scratched.

Better

A dial indicator on a mitre gauge.

Best

A dial indicator on a dedicated tool, like this Saw Gauge sold by Woodpeckers®.

1. Un-plug the tablesaw!
2. Take initial measurement.
3. Take relative measurement (second).
4. Loosen the three table fastener bolts.
5. Adjust as needed.

2. Take initial measurement

WARNING: MAKE SURE SAW IS UNPLUGGED. With the throat plate and all attachments removed, raise the blade to the highest position at 90 degrees with the table. Take an initial measurement about ½ inch from the ground edge of the blade as shown.

3. Take relative measurement

Keep the mitre gauge against the left rail and slowly move crossed the blade. Take the second measurement and compare with the initial measurement. Adjust the table to compensate false measurements. There are 3 bolts to loosen prior to adjusting the table, see step 4.

© 2022, Laguna Tools, Inc.

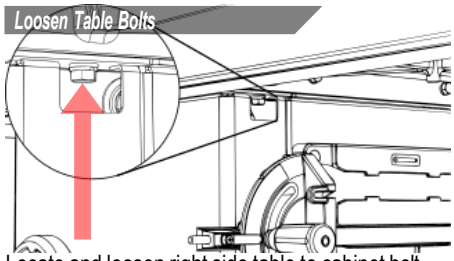

Locate and loosen right side table to cabinet bolt (above the tool holder).

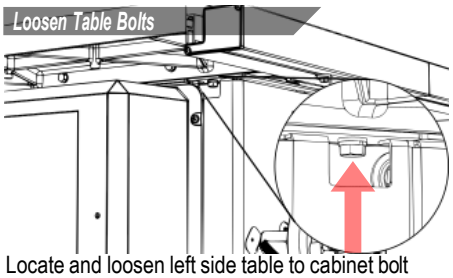

Locate and loosen left side table to cabinet bolt (above the motor cover).

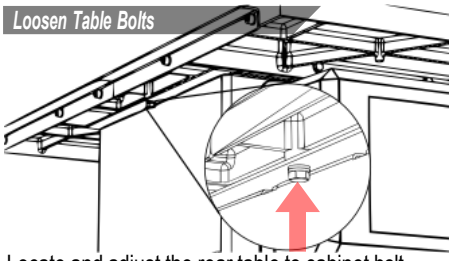

Locate and adjust the rear table to cabinet bolt.

Adjusting or Installing Extension Wings:

To install or remove the extension wings, an advised method is provided. This method makes it easy to make the extension wings flat with the table but requires the use of two ridged supports and four clamps.

1. Un-plug the tablesaw!
2. Clamp supports to table.
3. Place extension wing on supports.
4. Join or adjust the wing with supplied bolts.

NOTICE: The clamps may scratch the tabletop! Use a cloth or soft wood between the clamp and the iron surfaces.

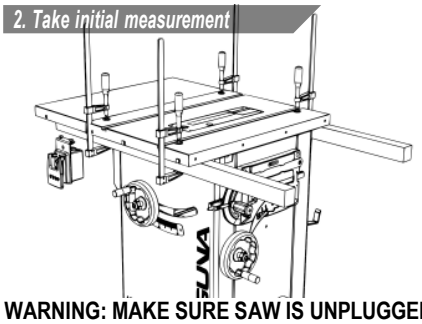

WARNING: MAKE SURE SAW IS UNPLUGGED. Clamp two wooden supports to the underside of the tablesaw as shown. Straight 2x4 lumber will work.

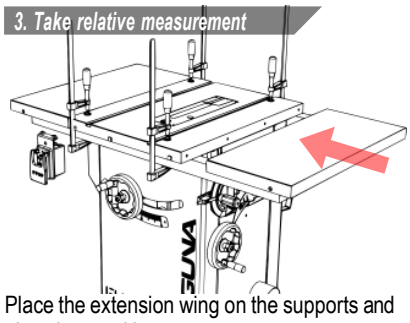

Place the extension wing on the supports and place into position.

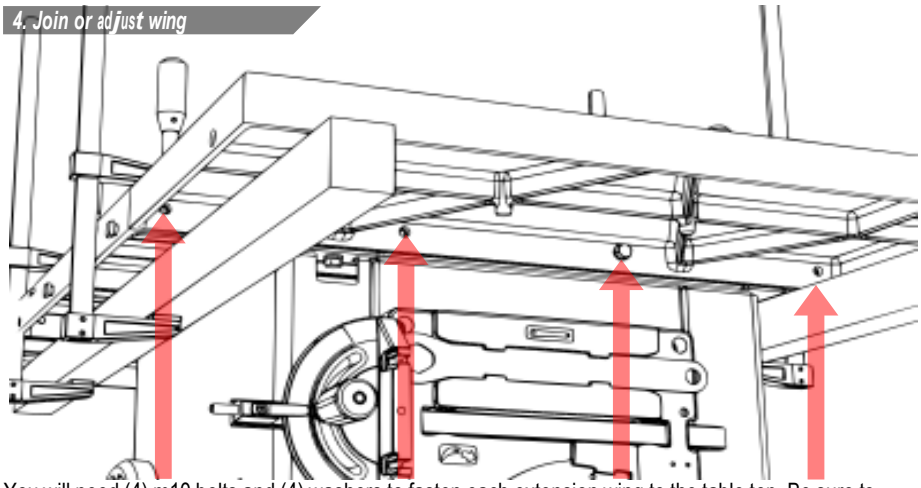

You will need (4) m10 bolts and (4) washers to fasten each extension wing to the table top. Be sure to align the extension wing to the table top prior to tightening the bolts.

© 2022, Laguna Tools, Inc.

Arbor Tilt (Bevel) Adjustments

Adjusting the Blade Tilt Limits

You can check the arbor (blade) tilt limits with an angle finder or 45-degree triangle. If these limits are not within 0 degrees and 45 degrees, use the following steps to adjust.

1. Unplug the tablesaw!
2. Remove the motor cover.
3. Remove the tool storage cover.
4. Locate tilt adjustment screws.
5. Adjust as needed.
6. Adjust the scale and indicator as needed.

Use Caution: *From the factory, the tilt limits a pre-set to be between 0 and 45 degrees tilt to the left. Adjusting this limit will slightly increase or decrease that amount which may cause zero clearance throat plate or fence to interfere. Adjusting these limits should only be done to set the tilt limits to 0 and 45 degrees.*

2. remove motor cover

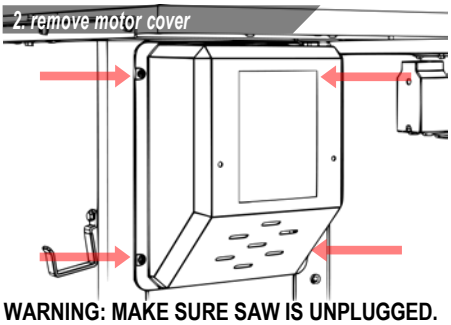

WARNING: MAKE SURE SAW IS UNPLUGGED. To access the left side tilt limit adjustment screw, remove the motor housing cover using a #2 Philips head driver. There are 4 screws in total holding on the motor cover.

3. remove tool storage cover

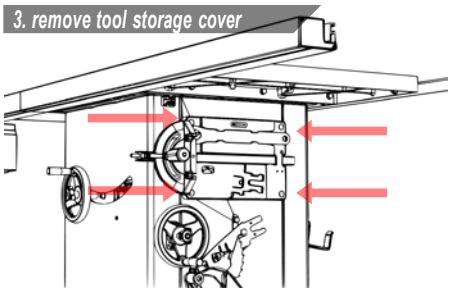

To access the right-side tilt adjustment screw, remove the tool storage using a #2 Philips head driver. There are 4 screws in total holding on the tool storage box.

4. Locate Tilt Adjustment screw

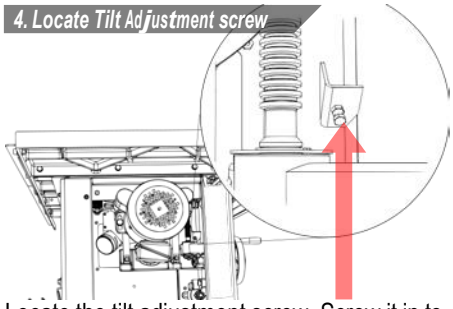

Locate the tilt adjustment screw. Screw it in to expand the tilt range slightly.

2. Locate tilt adjustment screw

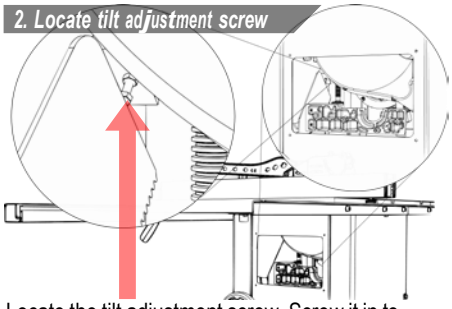

Locate the tilt adjustment screw. Screw it in to expand the tilt range slightly.

3. Adjust scale (if needed)

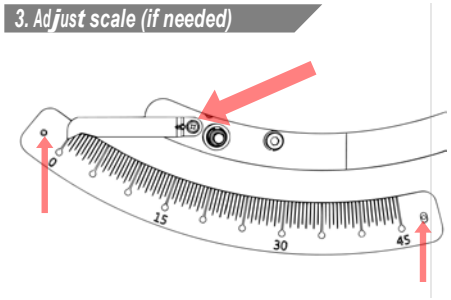

Adjust the scale and tilt indicator on the cabinet if needed.

Adjusting the DRO for Blade Tilt/Bevel

The blade tilt (bevel) adjustment control by worm gear box assembly C, handwheel D is located on the side of the saw, Figs. D & E.

Turn the handwheel C left or right as required to set the blade to the desired angle. The blade can be tilted to the left anywhere from 0° (90° to the table) to 45°.

WARNING: TO LIMIT YOUR EXPOSURE TO THE BLADE AND ALSO TO MAXIMISE THE EFFECTIVENESS OF THE ANTI-KICKBACK PAWLS (WHEN USING THE RIVING STYLE SPLITTER & BLADE GUARD), NEVER TAKE MORE BLADE HEIGHT THAN IS REQUIRED TO COMPLETE THE CUT. WHEN SETTING THE BLADE HEIGHT FOR THROUGH-CUTS (CUTS ALL THE WAY THROUGH THE THICKNESS OF A BOARD) SET THE HEIGHT OF THE BLADE TO ROUGHLY 1/4" HIGHER THAN THE THICKNESS OF THE BOARD.

© 2022, Laguna Tools, Inc.

Figs. D & E

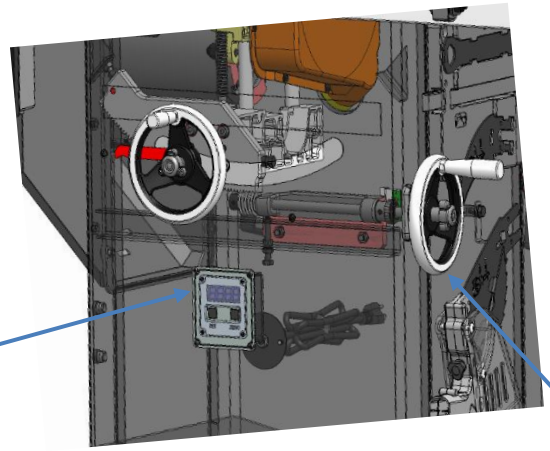

C

D (Handwheel, angle)

DRO (bevel angle)

DRO operation

- Power on, DRO displays 0.0.

© 2022, Laguna Tools, Inc.

- Move bevel to 0°, press ZERO to reset 0.0.

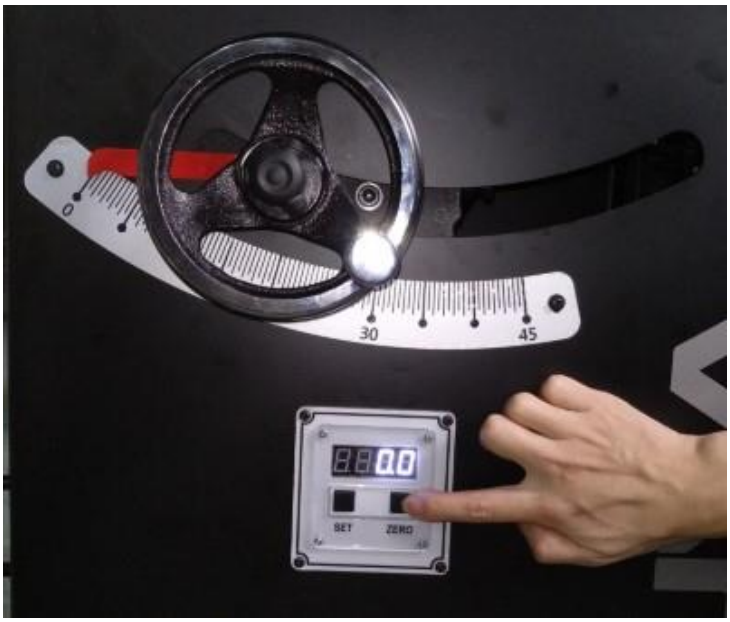

- DRO can reset zero at any position, by pressing ZERO.

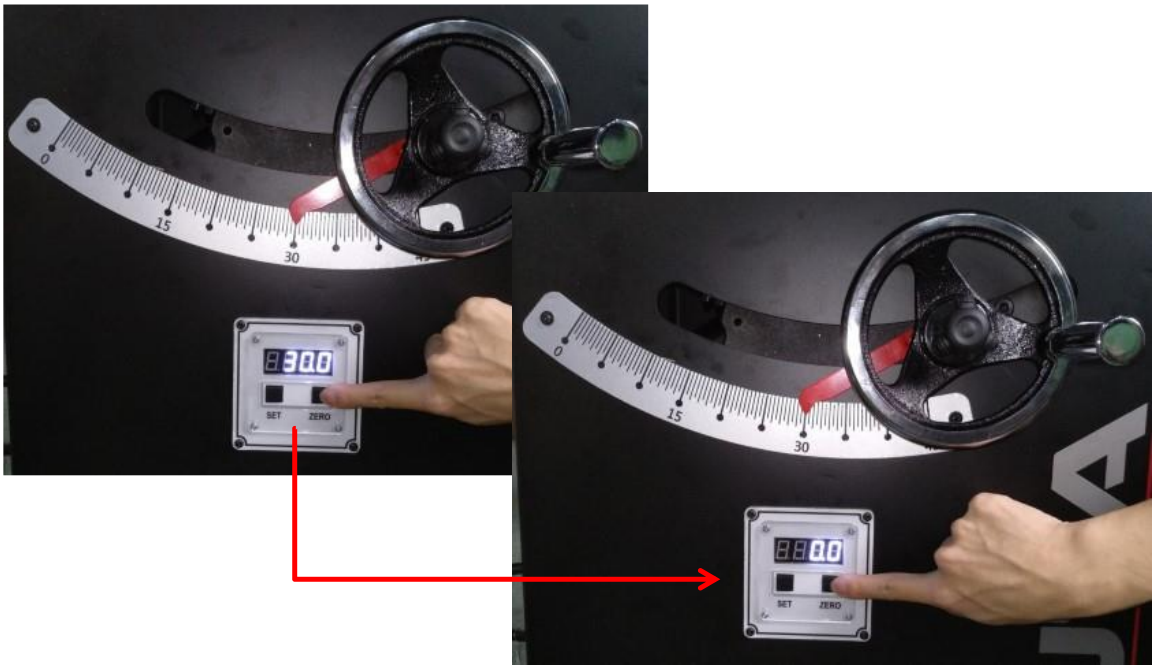

© 2022, Laguna Tools, Inc.

DRO CALIBRATION

- Step 1：Angle/blade set to 0°(90°), press ZERO to reset, display 0.0

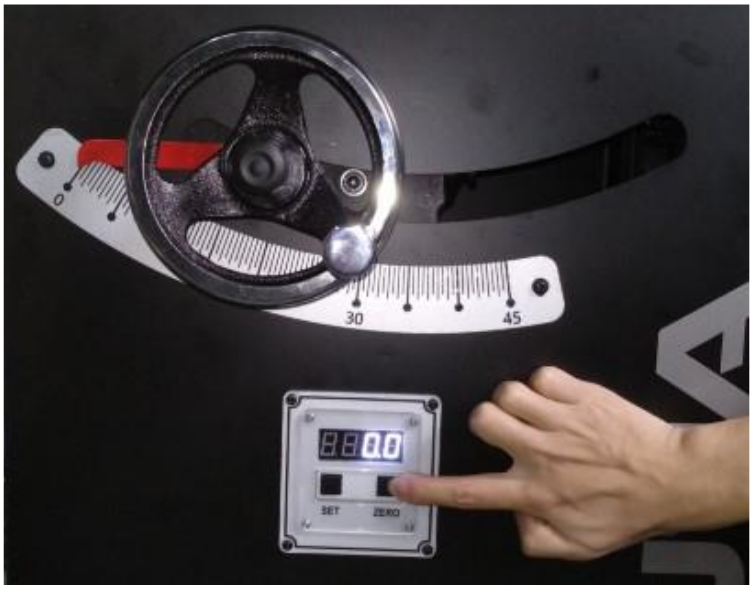

- Step 2：Angle/blade set to 45°, press & hold SET

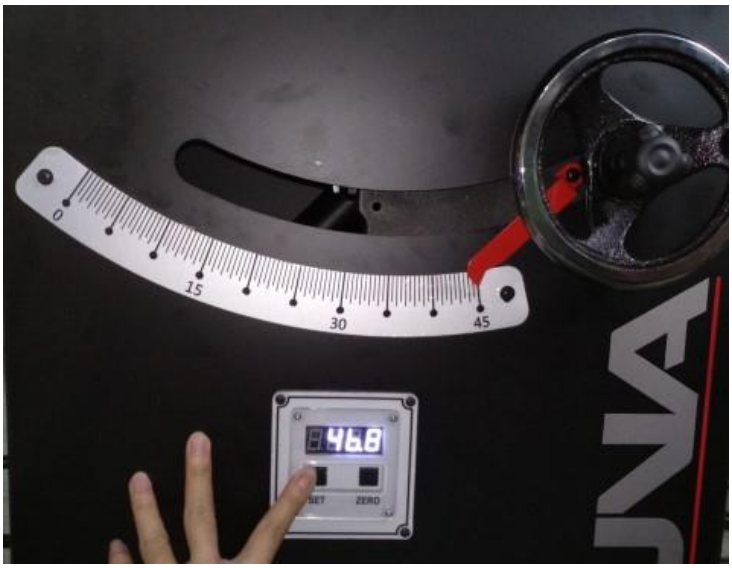

© 2022, Laguna Tools, Inc.

- Step 3：hold SET, and press ZERO for 3 seconds, DRO display 45.0, release ZERO.

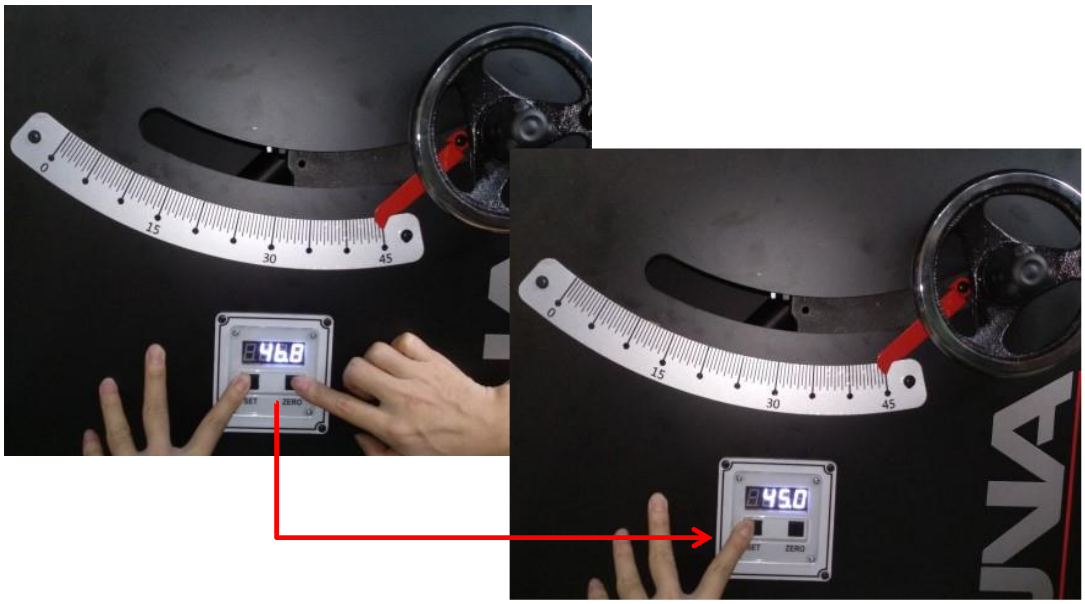

- Step 4：Release SET, calibration complete.

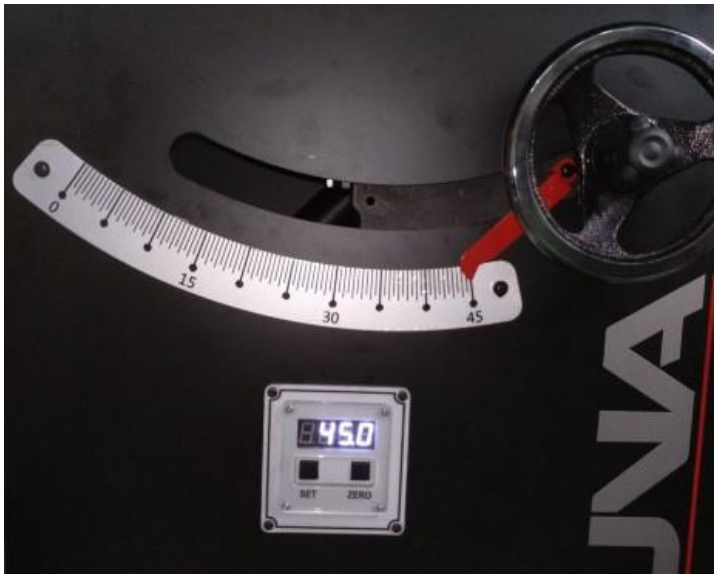

© 2022, Laguna Tools, Inc.

Adjusting the Belt:

It is good practice to check the tension of the belt often to ensure that the saw is performing properly. If the tablesaw blade is slipping or is feeling underpowered, you may need to tighten the belt. To do so, follow the steps below.

1. Unplug the tablesaw!
2. Remove the motor cover.
3. Locate belt adjustment bolt.
4. Tighten or loosen with weight of motor.

Use Caution: *DO NOT OVERTIGHTEN BELT! The weight of the motor is adequate to put enough tension on the belt. Only tight enough to prevent slippage.*

Remove the motor cover

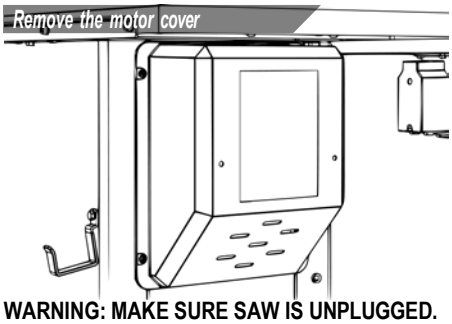

WARNING: MAKE SURE SAW IS UNPLUGGED. To access the motor, remove the motor housing cover using a #2 Philips head driver. There are 4 screws in total holding on the motor cover.

Locating Belt Adjustment bolt

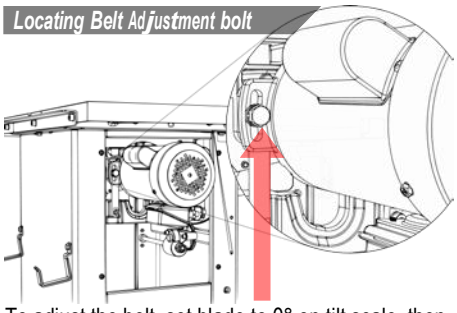

To adjust the belt, set blade to 0° on tilt scale, then raise or lower blade to approximately 2" above table. Loosen the belt adjustment bolt. With the bolt loose, Raise or lower the motor so that the belt is tight.

© 2022, Laguna Tools, Inc.

Changing the Belt:

1. Unplug the tablesaw!
2. Remove all throatplates, blades, and blade accessories.
3. Remove the motor cover.
4. Remove the dust shroud.
5. Loosen the Belt adjustment bolt and loosen belt by raising motor.
6. Remove belt. **NOTE**: you may need to lower the arbor height to access the belt.
7. Replace belt.

Use Caution: *DO NOT OVERTIGHTEN BELT! The weight of the motor is adequate to put enough tension on the belt. Only tight enough to prevent slippage.*

Belt Adjustment bolt

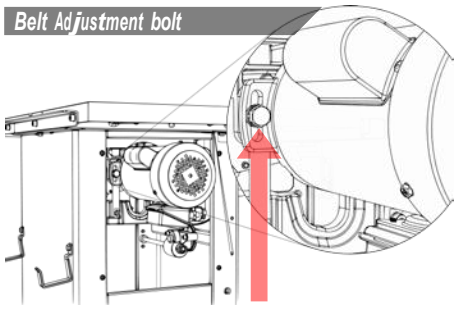

WARNING: MAKE SURE SAW IS UNPLUGGED.
NOTICE: The drawing shown is with the top of the table removed. **AVOID** removing the table top. The belt can easily be changed without removing the table top

Accessing the Belt

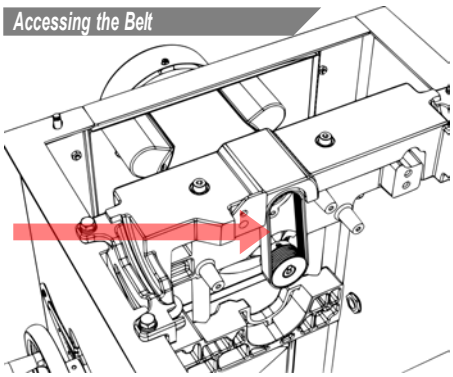

Accessory Adjustments

Insert Block Adjustments (For all Safety Accessories):

The Riving knife, blade guard, or splitter must be aligned with the blade to be used affectively. The riving knife should only be sued with blades specified on the riving knife. To adjust the position of the blade safety attachments, relative to the saw blade: **NOTE:** if the cam action lever does not lock or is too hard to lock – adjust the ½" nut on the back side of the cam action axil. You will need to remove the motor cover

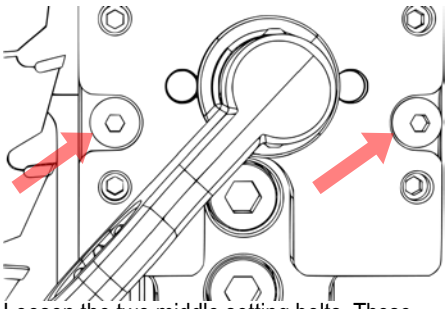

Loosen the two middle setting bolts. These two bolts fasten the assembly in-between the set screws and the arbor block.

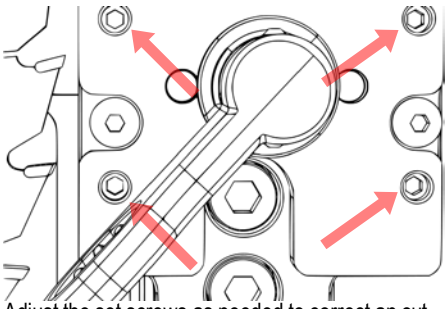

Adjust the set screws as needed to correct an out of align blade attachment. Do small adjustments and check.

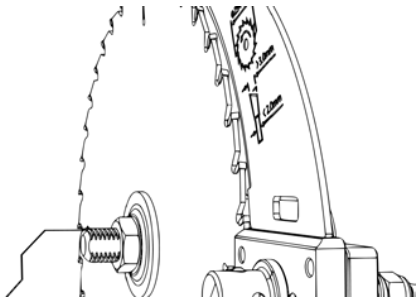

As Adjustments are made, the blade attachments will translate, not rotate, by design. This ensures that the workpiece will not get held up. **CHECK COMPONENTS BEFORE EVERY CUT.**

Blade Guard Adjustments:

The blade guard can be partially disassembled by unscrewing the thumbscrew at the top of the blade guard assembly. The guards should only be taken off to perform safe cuts that otherwise would be impossible with the blade guard on.

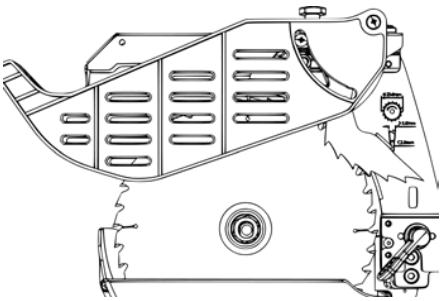

Shown is the blade guard in the fully assembled position.

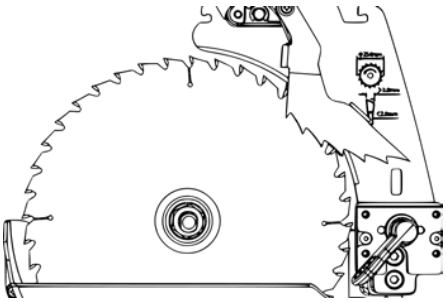

Shown is the blade guard in the held assembled position with the anti-kickback pawls still attached.

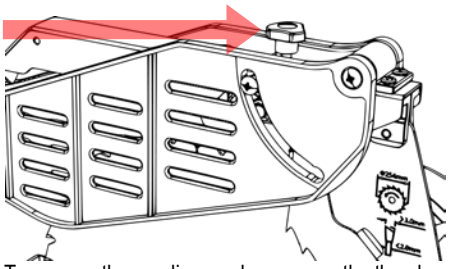

To remove the acrylic guards, unscrew the thumb screw located on the top of the frame. Slide the guards away and apart.

© 2022, Laguna Tools, Inc.

Maintenance

To keep you Laguna Tools machine in top performance for many years please follow this maintenance schedule and refer to any instructions.

Daily Check:
- Loose mounting bolts
- Damaged saw blade
- Damaged riving knifes, splitters, or blade guards
- Worn or damaged wires
- Any other unsafe condition

Weekly Maintenance:
- Clean table surface and miter slot grooves
- Clean and protect cast-iron table
- Clean rip fence

Monthly Maintenance:
- Clean/vacuum dust buildup from inside cabinet and off motors.
- Check/replace belt for proper tension, damage or wear.

Every 6–12 Months:
- Lubricate trunnion slides.
- Lubricate worm gear.
- Lubricate leadscrew.
- Lubricate gearing and gearboxes.

Notes

warning: *DO NOT perform any of the following steps, installations, or adjustments with the saw connected to the power source.*

Internal Components Map

A. Motor
B. Dust Shroud
C. Trunnion Slides (Support)
D. Upper Trunnion
E. Lower Trunnion
F. Arbor Nut
G. Arbor Washer (Flange)
H. Blade
I. Tilt Gearing
J. Height Gearing
K. Belt (behind blade)
L. Worm Screw
M. Tilt Plate
N. Start Capacitor (see spec sheet)
O. Run Capacitor (see spec sheet)

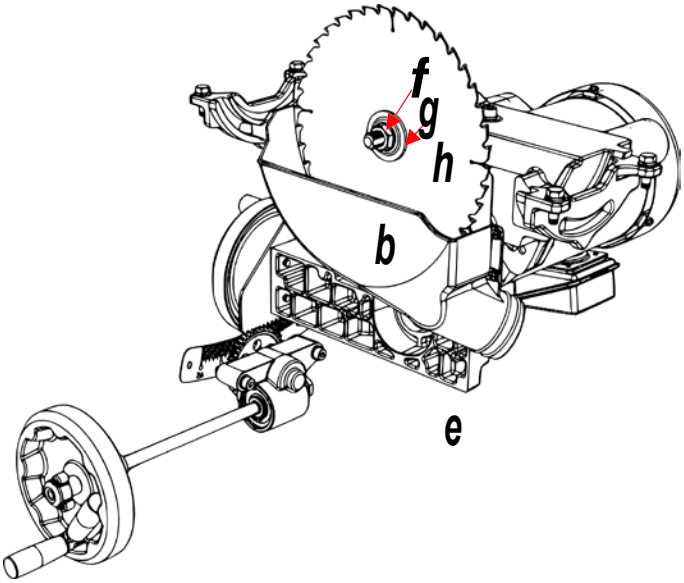

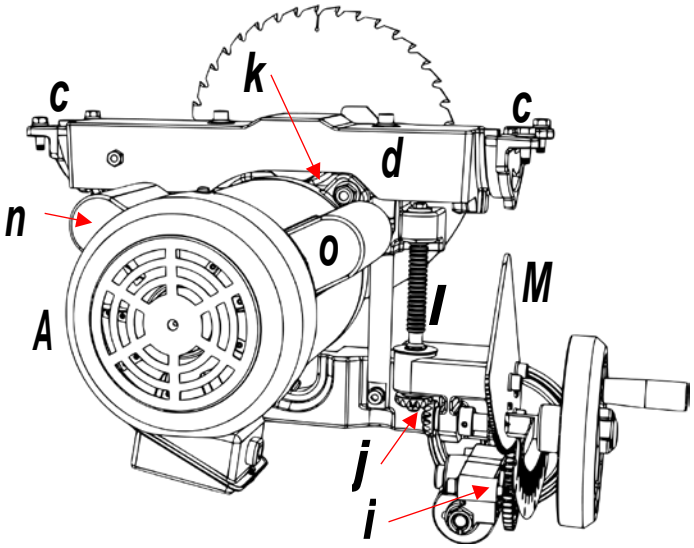

© 2022, Laguna Tools, Inc.

Trouble-Shooting

Behavior	Possible Causes	Possible Solution
Machine will not start or continues to trip the breaker.	1. Start capacitor at fault 2. Motor connection wired wrong 3. Wiring at fault 4. Motor Start/Stop switch at fault 5. Motor at fault 6. Run capacitor at fault 7. Wall circuit breaker tripped or at fault 8. Power supply switched OFF or at fault 9. Plug/receptacle at fault or wired incorrectly	1. Test/replace if faulty. 2. Correct motor wiring connections. 3. Check/fix broken, disconnected, or corroded wires. 4. Replace switch. 5. Test/repair/replace. 6. Test/replace if faulty. 7. Ensure circuit size is correct/replace weak breaker. 8. Ensure power supply is on/has correct voltage. 9. Test wires and contacts; correct the wiring.
Machine is excessively loud or is experiencing excessive vibration.	1. Motor or component loose 2. Blade at fault 3. Motor mount loose/broken 4. Machine incorrectly mounted 5. Arbor pulley loose 6. Belts worn or loose 7. Pulley loose or at fault 8. Arbor bearings at fault 9. Motor bearings at fault	1. Inspect/replace damaged bolts/nuts, and re-tighten with thread-locking fluid. 2. Replace warped/bent blade; re-sharpen dull blade. 3. Tighten/replace. 4. Tighten mounting bolts; relocate/shim machine. 5. Retighten/replace arbor pulley. 6. Adjust tension of/replace belt 7. Realign/replace shaft, pulley, setscrew, and key. 8. Replace arbor housing bearings; replace arbor. 9. Test by rotating shaft; grinding/loose shaft requires bearing replacement.
Machine trips the overload, or feels underpowered during operation.	1. Feed rate/cutting speed too fast 2. Workpiece material unsuitable for machine 3. Pulley/sprocket slipping on shaft 4. Motor bearings at fault 5. Contactor at fault 6. Motor overheated 7. Workpiece crooked; fence not aligned 8. Machine undersized for task; wrong blade 9. Run capacitor at fault 10. Belt is slipping from pulley 11. Motor wired incorrectly 12. Plug/receptacle at fault 13. Motor at fault	1. Decrease feed rate/cutting speed. 2. Only cut wood; ensure moisture is below 20%. 3. Test for good contacts/correct wiring. 4. Replace loose pulley/shaft. 5. Test/repair/replace. 6. Test all legs for power/replace if faulty. 7. Clean motor, let cool, and reduce workload. 8. Straighten or replace workpiece; adjust fence. 9. Use correct blade; reduce feed rate or depth of cut. 10. Test/repair/replace. 11. Adjust tension of/replace belt. 12. Wire motor correctly. 13. Test/repair/replace.

© 2022, Laguna Tools, Inc.

Wiring Diagrams: Fusion F2 110V & 220V

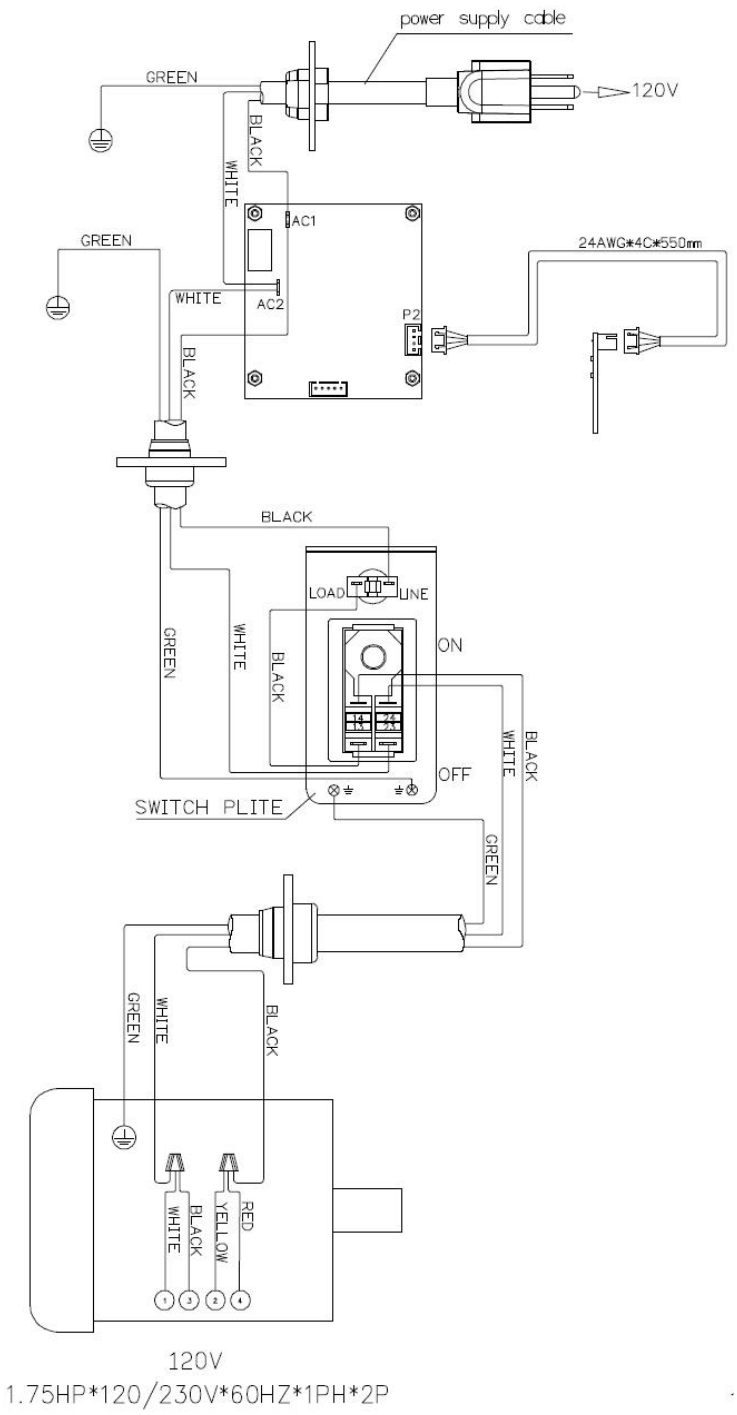

120V
1.75HP*120/230V*60HZ*1PH*2P

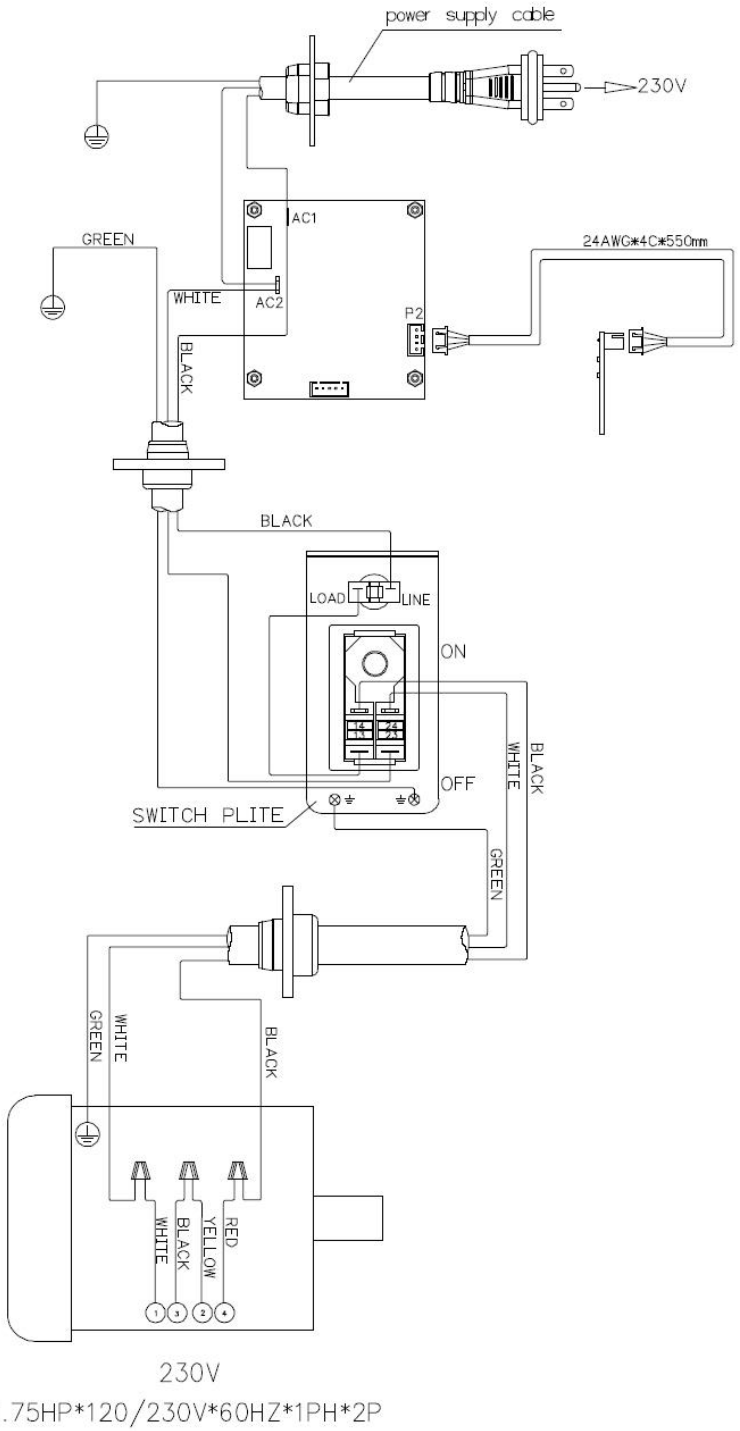

230V
1.75HP*120/230V*60HZ*1PH*2P

Information: *The Fusion 2 tablesaw comes wired for 110\115V from the factory with a 110V Switch assembly.*
To wire this saw to A 220V power supply, a new 220V switch assembly is required.
Please call Laguna tools customer service to order parts: 1-949-474-1200.

© 2022, Laguna Tools, Inc.

110 volt to 220 volt conversion kit

Item	Part No.	Descriptions	Specification	Q'ty
	TH0504	F1 & F2 Conversion Kit 110V to 220V		1
1	937878-001	Magnetic Switch Assembly	230V	1
.1	821028-002	Magnetic Switch	KJD17B-230V	1
.2	251302-615	Switch Box		1
.3	174470-904	Switch Plate		1
.4	001102-311	Round Head Tapping Screw	M4*1.59P*32	2
.5	000302-101	Round Head Phillips Screw	M4*0.7P*6	2
.6	006501-100	Tooth Washer	4.3*8.5(BW-4)	2
.7	020003-000	Strain Relief	SB7R-3	2
.8	453012-021	Power Cord	SJT14AWG*3C*3000mm	1
.9	471003-004	Connect Cord	14AWG*1C*100mm	1
.10	920266-000	Reset Switch	9AMP(220V-240V)	1
2	473003-058	Connect Cord	SJT14AWG*3C*1050mm	1
3	575301-000	Box Label		1
5	520001-975	Box		1

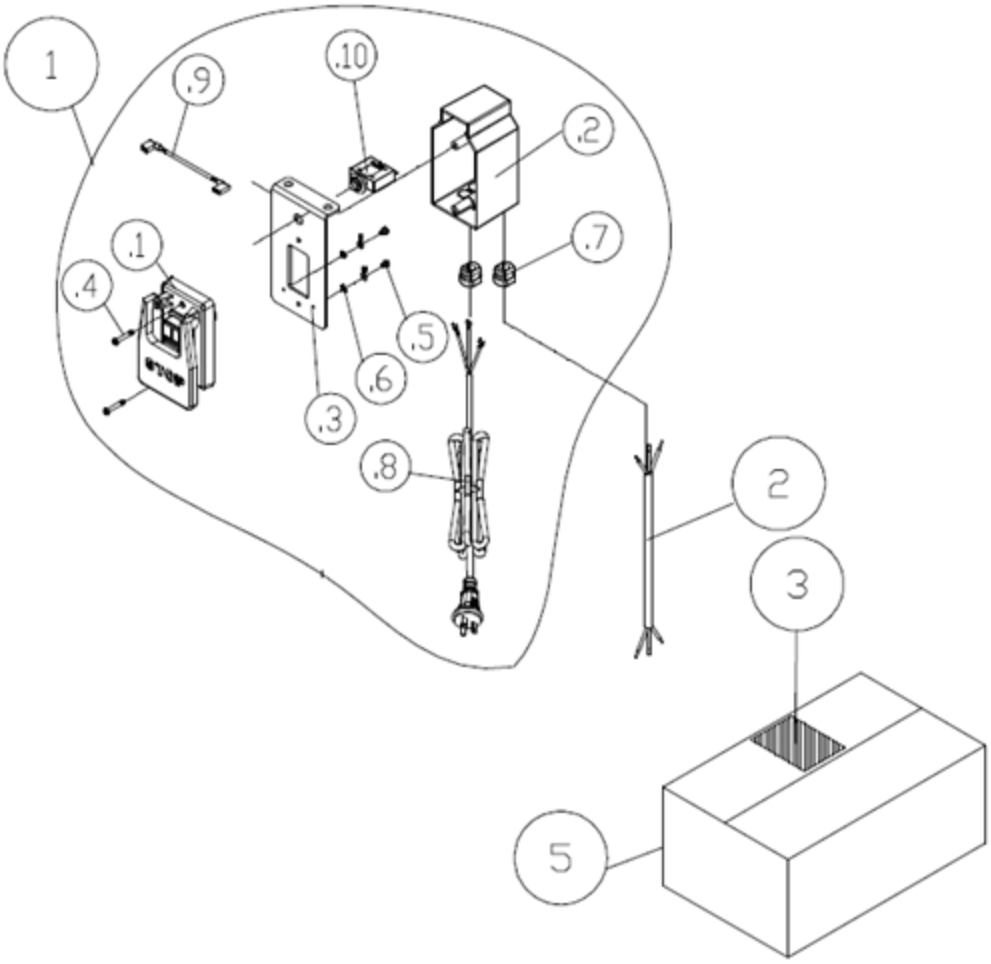

© 2022, Laguna Tools, Inc.

The F2 Fusion table saw can be converted to 220 Volt (from 110 Volt) with Conversion kit # 601110. Have a qualified technician make the conversion.
NOTE: Cord and plug not included with kit.

WARNING

Disconnect power supply to planer before continuing! Only connect power when required.

1. Turn OFF switch and disconnect power supply to machine.
2. Remove/open panel to access motor.
3. Rewire motor to 220 volt operation as shown in the wiring diagram for your model saw.
4. Remove cover of connection box.
5. Replace original 110 volt cord with new 220 volt cord from. See wiring diagram.

Power Cord w/ Plug for 220V

Fig: 220 volt cord & plug

6. Remove the screws from the cover of the Control Box.
7. Remove wiring from 110 Volt breaker.
8. Remove 110 volt breaker from Control Box.
9. Install new 220 volt breaker into Control Box.
10. Remove wires from 110 volt switch.
11. Connect wires to new 220 volt switch.

© 2022, Laguna Tools, Inc.

Parts Diagrams

Fence Assembly

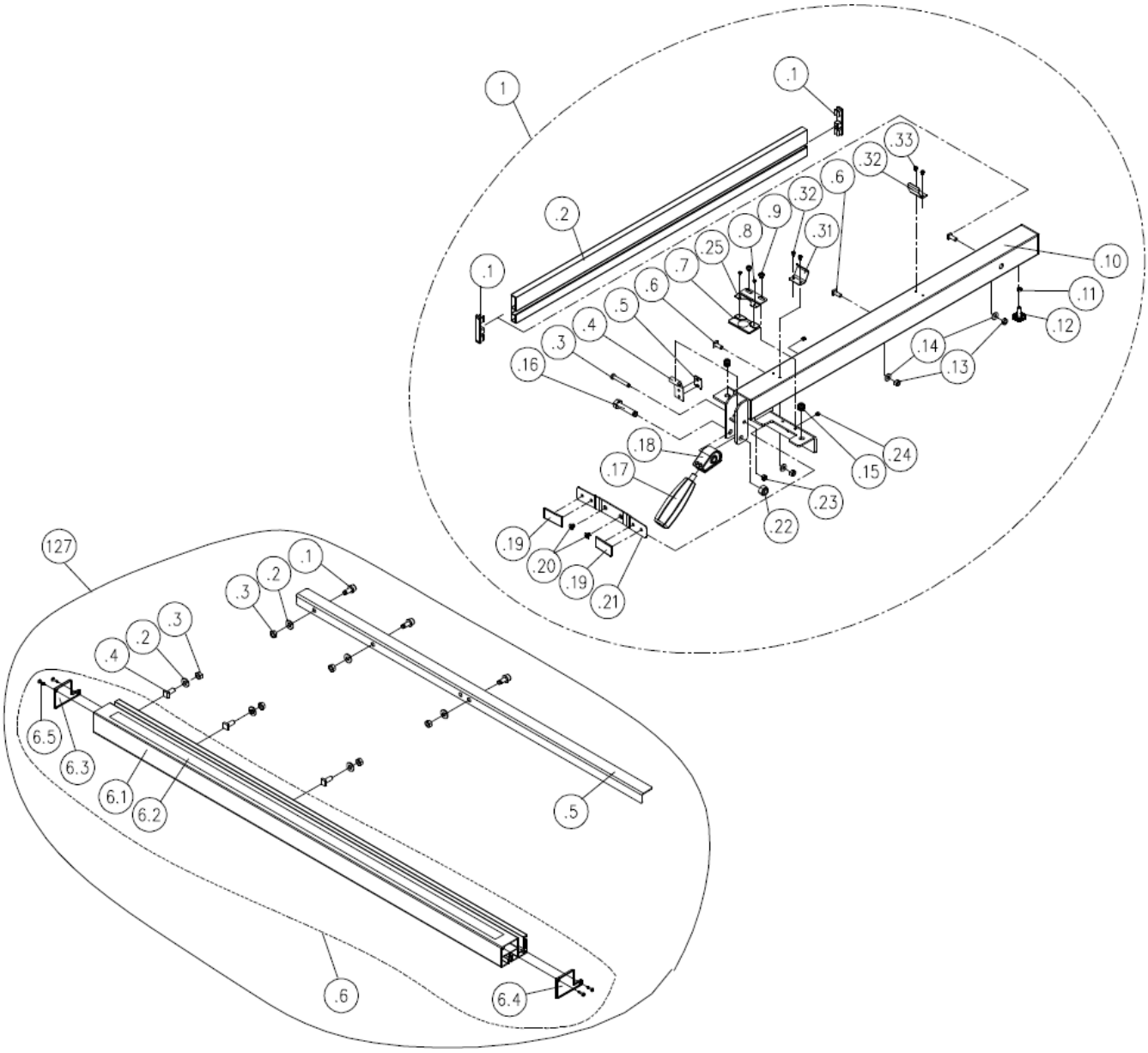

© 2022, Laguna Tools, Inc.

Miter Gauge, Blade Guard

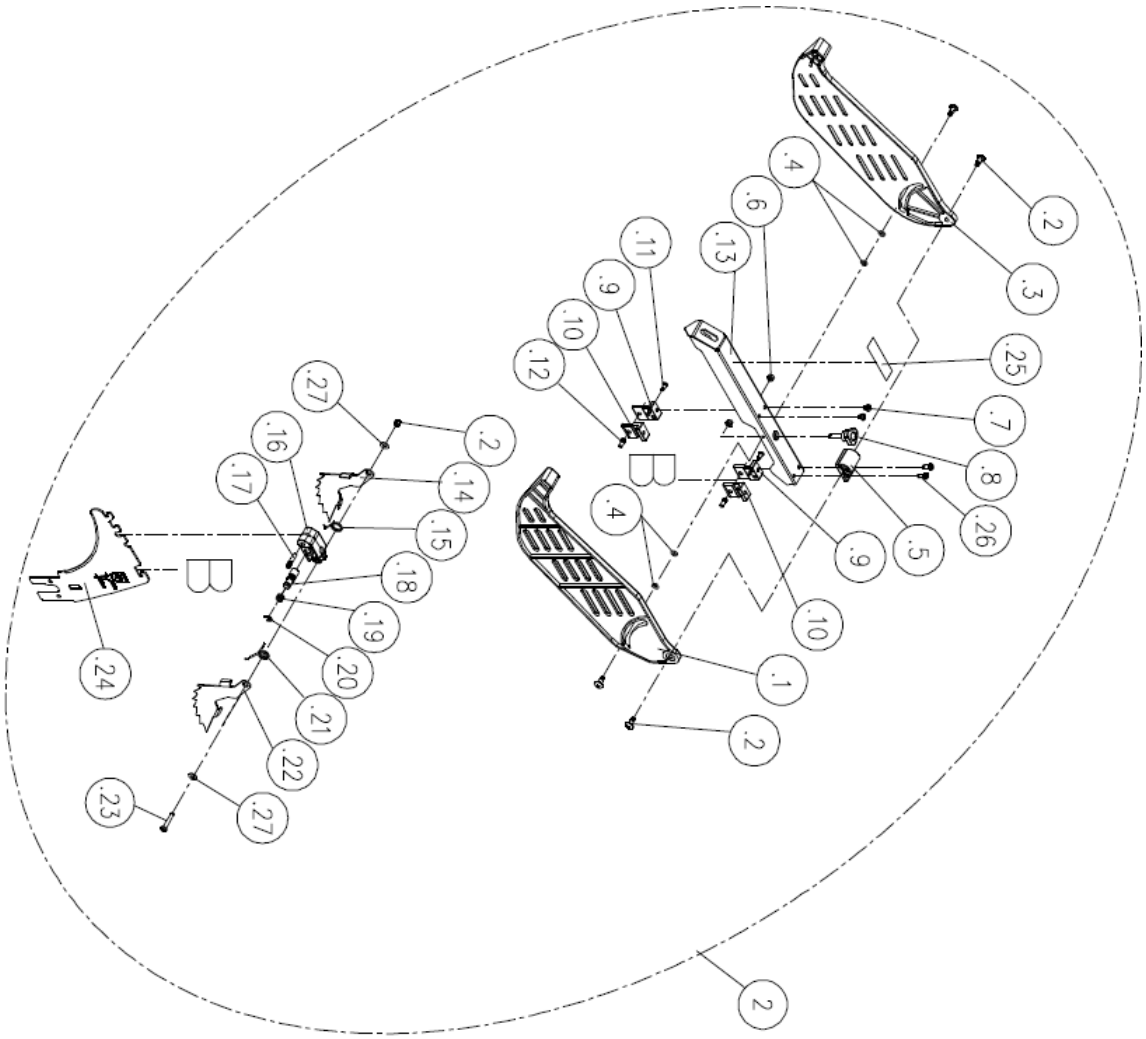

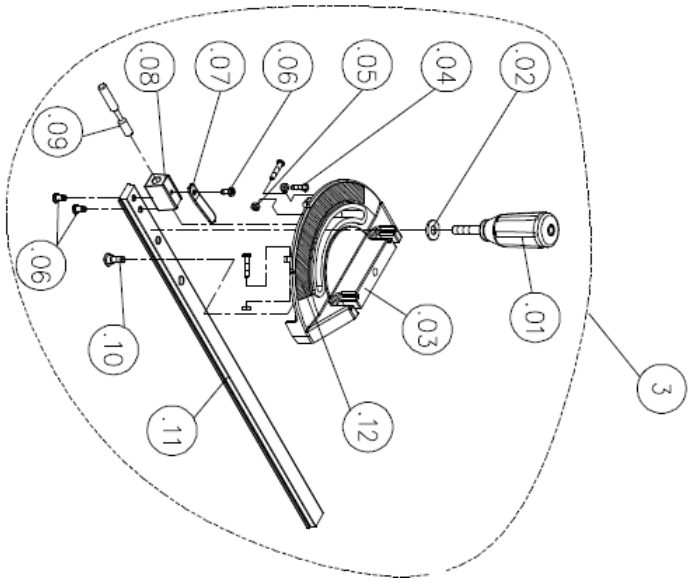

Motor and Trunnion

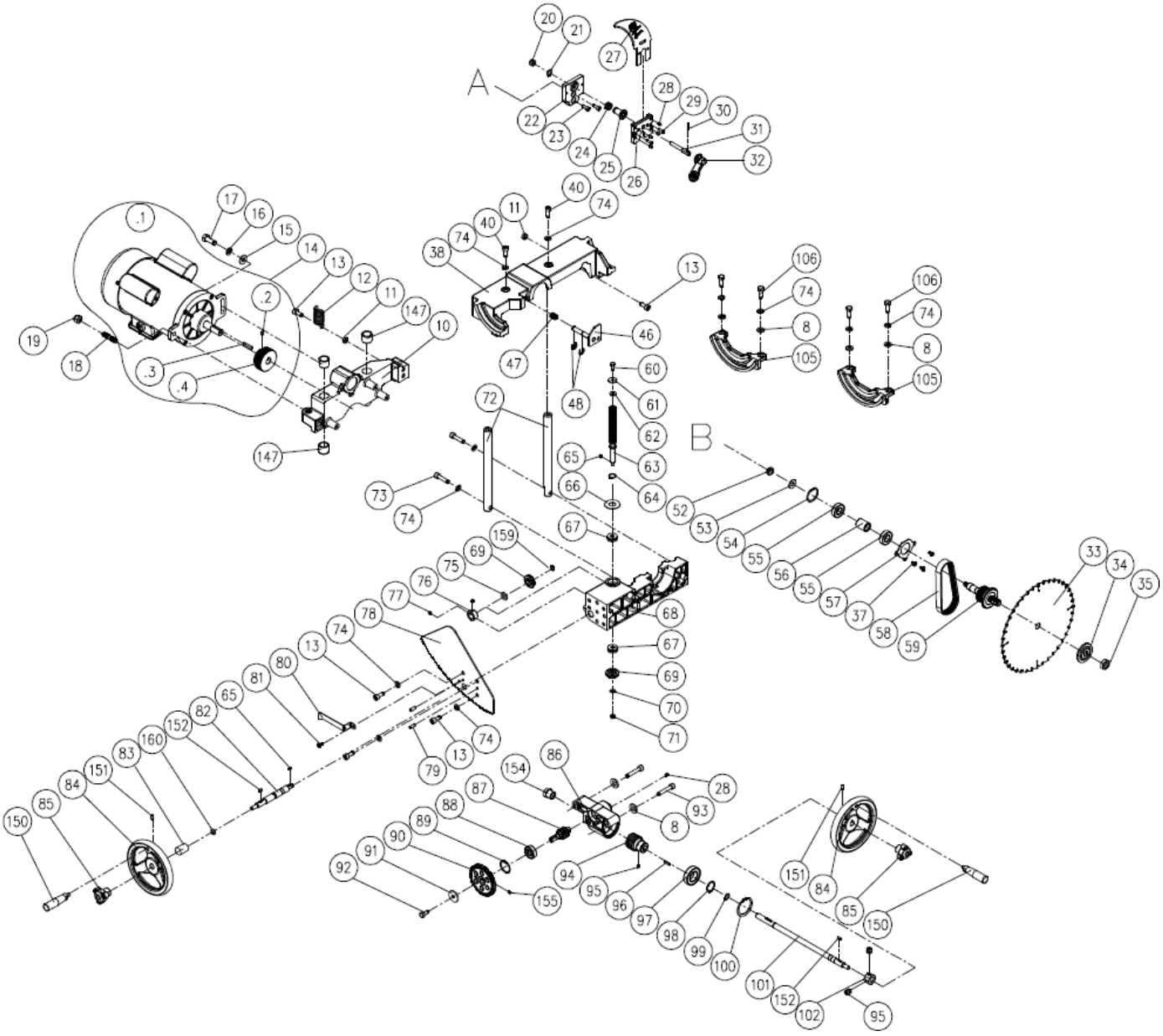

© 2022, Laguna Tools, Inc.

Cabinet

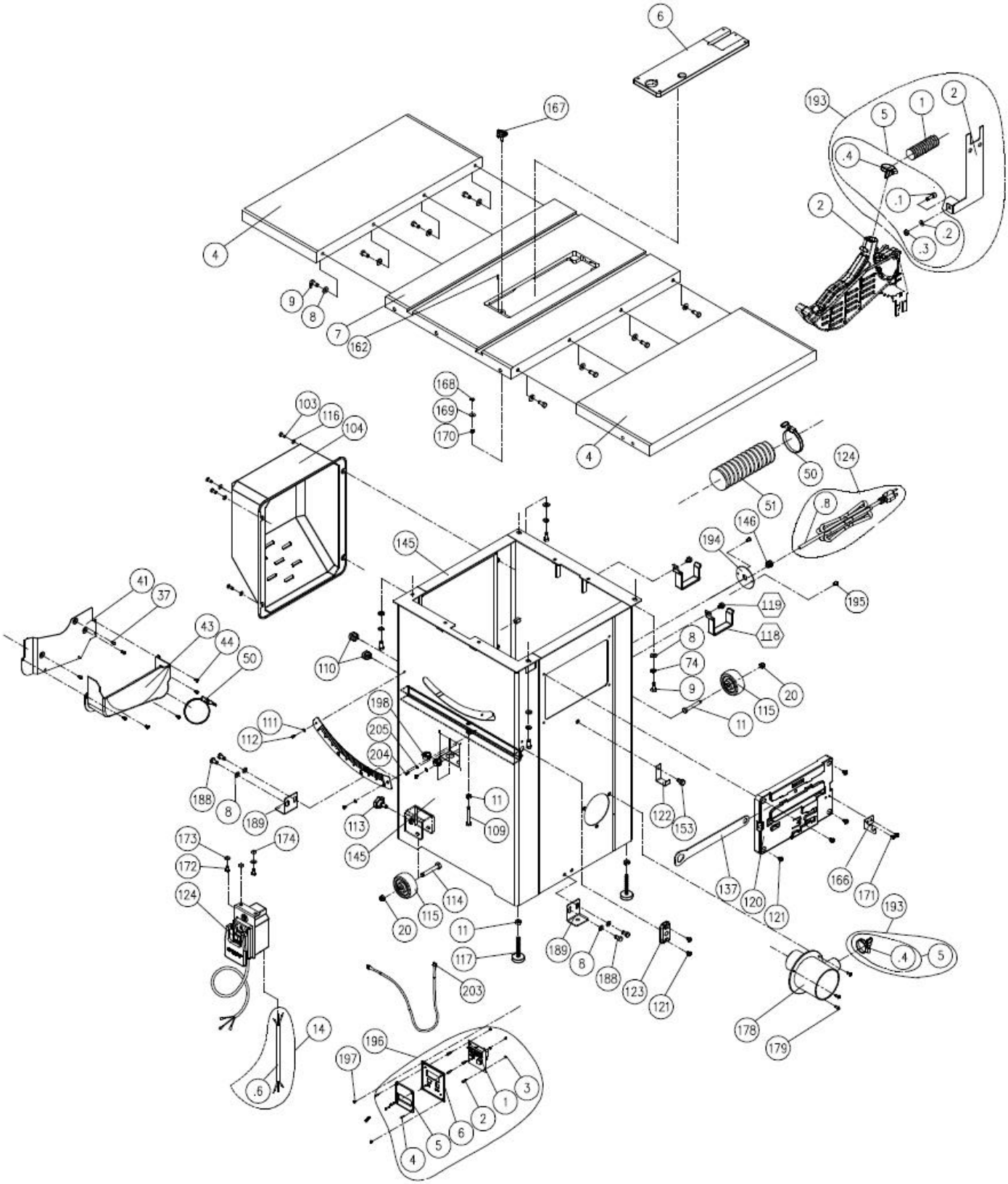
6
167
193
5
1
2
.4
.1
2
.2
.3
4
9
8
7
162
168
169
170
4
103
116
104
50
124
51
.8
146
194
145
195
41
37
43
44
50
119
118
8
74
9
20
115
11
110
198
205
204
111
112
188
8
189
113
11
109
122
153
173
174
172
124
145
114
115
20
11
117
203
137
120
121
166
171
193
.4
5
189
8
188
123
121
178
179
14
.6
196
197
3
1
2
6
5
4

Parts List

Key	Laguna Tools Part Number	Part Description	Notes	Q'ty
1	PTSF236110175-0130-1-1	Rip Fence Assembly		1
1	PTSF236110175-0130-1	52" Rail Assembly		1
1.1	PTSF236110175-0130-1.1	CAP Screw w/ Spring Washer	M8-1.25x20/8.2x15.4	3
1.2	PTSF236110175-0130-1.2	Flat Washer	8.5x16x2.0	6
1.3	PTSF236110175-0130-1.3	Hex Nut	M8x1.25 (13Bx6.5H)	6
1.4	PTSF236110175-0130-1.4	Square Bolt	M8-1.25x20	3
1.6	PTSF236110175-0130-1.6	Rear Rail		1
1.7	PTSF236110175-0130-1.7	Front Rail Assembly	52"	
2	PTSF236110175-0130-2-1	Blade Guard Assembly		1
2	PTSF236110175-0130-2	Right Table Assembly		1
2.1	PTSF236110175-0130-2.1	CAP Screw w/ Spring Washer	M8-1.25x20/8.2x15.4	4
2.10	PTSF236110175-0130-2.10	Steel Tube		2
2.2	PTSF236110175-0130-2.2	Flat Washer	8.5-16x2.0	8
2.3	PTSF236110175-0130-2.3	Hex Nut	M8-1.25 (13Bx6.5H)	10
2.4	PTSF236110175-0130-2.4	Square Bolt	M8-1.25x20	4
2.5	PTSF236110175-0130-2.5	Leveling foot		2
2.7	PTSF236110175-0130-2.7	PDF Table		1
2.8	PTSF236110175-0130-2.8	Brace		4
2.9	PTSF236110175-0130-2.9	Self-Tapping screw		8
3	PTSF236110175-0130-3	Miter Gauge Assembly		1
4	PTSF236110175-0130-4	Extension Table		2
6	PTSF236110175-0130-6	Table Insert Assembly		1
7	PTSF236110175-0130-7	Table		1
8	PTSF236110175-0130-8	Flat Washer	8.5-16x2.0	19
9	PTSF236110175-0130-9	Hex screw	M8-1.25x20	13
10	PTSF236110175-0130-10	Up-down Bracket		1
11	PTSF236110175-0130-11	Hex Nut	M8-1.25 (13Bx6.5H)	4
12	PTSF236110175-0130-12	Spring		1
13	PTSF236110175-0130-13	Cap Screw	M8*1.25P*20	5
14	PTSF236110175-0130-14	Motor Assembly	1.75HP/110V/60HZ/1PH	1
14	PTSF236110175-0130-14-1	Motor Assembly	1.75HP/220V/60HZ/1PH MTSF3362203-0130	1
15	PTSF236110175-0130-15	Flat Washer	10x20x3.0	1
16	PTSF236110175-0130-16	Spring Washer	10.2x18.5	1
17	PTSF236110175-0130-17	Hex Screw	M10-1.5x30	1
18	PTSF236110175-0130-18	Motor Fixing Shaft		1
19	PTSF236110175-0130-19	Lock Nut	M10-1.5 (17Bx12H)	1
20	PTSF236110175-0130-20	Lock Nut	M8-1.25 (13Bx9H)	4
21	PTSF236110175-0130-21	Retaining Ring	STW-14	1
22	PTSF236110175-0130-22	Bracket for Riving Knife		1
23	PTSF236110175-0130-23	Cap Screw	M8-1.25x16	2
24	PTSF236110175-0130-24	Spring		1
25	PTSF236110175-0130-25	Bushing		1
26	PTSF236110175-0130-26	Block		1
27	PTSF236110175-0130-27	Riving Knife		1
28	PTSF236110175-0130-28	SET Lock Screw	M6-1.0x8	5
29	PTSF236110175-0130-29	Round Head Screw	M-*0.8x16	2

© 2022, Laguna Tools, Inc.

30	PTSF236110175-0130-30	Pin		1
31	PTSF236110175-0130-31	Fixing Knob		1
32	PTSF236110175-0130-32	Lock Handle		1
33	PTSF236110175-0130-33	Sawblade	10"*40T	1
34	PTSF236110175-0130-34	Sawblade clamp		1
35	PTSF236110175-0130-35	Nut	TW5/8"-12(in)	1
37	PTSF236110175-0130-37	Round Head Socket Lock Screw	M5*0.8P*12	6
38	PTSF236110175-0130-38	Upper Trunnion		1
40	PTSF236110175-0130-40	Locking CAP screw	M8*1.25P*20	2
41	PTSF236110175-0130-41	Fixing Plate		1
43	PTSF236110175-0130-43	Dust Hood		1
44	PTSF236110175-0130-44	Pan Head Screw	M5*0.8P*8	5
46	PTSF236110175-0130-46	Arbor Lock Handle		1
47	PTSF236110175-0130-47	Spring		1
48	PTSF236110175-0130-48	Retaining Ring	ETW-9	2
50	PTSF236110175-0130-50	Clamp	I.D.60-80mm(O.D.)	1
51	PTSF236110175-0130-51	Dust Hose	2.5”(O.D.)*800mm	1
52	PTSF236110175-0130-52	Lock Nut	M10*1.5P(17B*8H)	1
53	PTSF236110175-0130-53	Flat Washer	10.3*23*2.0t	1
54	PTSF236110175-0130-54	Retaining Ring	RTW-35	1
55	PTSF236110175-0130-55	Ball Bearing		2
56	PTSF236110175-0130-56	Spacer		1
57	PTSF236110175-0130-57	Fixed Plate		1
58	PTSF236110175-0130-58	Poly V-Belt	135J7	1
59	PTSF236110175-0130-59	Arbor		1
60	PTSF236110175-0130-60	Hex. screw	M6*1.0P*16	1
61	PTSF236110175-0130-61	Flat Washer	6.2*20*3.0t	1
62	PTSF236110175-0130-62	Flat Washer	6.4*16*1.6t	1
63	PTSF236110175-0130-63	Lead Screw		1
64	PTSF236110175-0130-64	Retaining Ring	STW-16	1
65	PTSF236110175-0130-65	Key	4*4*8	2
66	PTSF236110175-0130-66	Washer		1
67	PTSF236110175-0130-67	Bearing	51100	2
68	PTSF236110175-0130-68	Trunnion		1
69	PTSF236110175-0130-69	Bevel Gear		2
70	PTSF236110175-0130-70	Flat Washer	6.4*16*1.0t	1
71	PTSF236110175-0130-71	Lock Nut	M6*1.0P(10B*5H)	2
72	PTSF236110175-0130-72	Column		2
73	PTSF236110175-0130-73	Cap Screw	M8*1.25P*35	2
74	PTSF236110175-0130-74	Spring Washer	8.2*15.4	14
75	PTSF236110175-0130-75	Flat Washer	10*20*1.5t	1
76	PTSF236110175-0130-76	Bushing		1
77	PTSF236110175-0130-77	Set Screw	M5*0.8P*5	2
78	PTSF236110175-0130-78	Plate		1
79	PTSF236110175-0130-79	Spring Pin	6*16	2
80	PTSF236110175-0130-80	Pointer		1
81	PTSF236110175-0130-81	Round Head Lock Screw w/Washer	M5*0.8P*12/5*10.5*1.0t	1
82	PTSF236110175-0130-82	Shaft		1
83	PTSF236110175-0130-83	Bushing		1
84	PTSF236110175-0130-84	Handwheel		2
85	PTSF236110175-0130-85	Fixing Knob		2
86	PTSF236110175-0130-86	Worm Gear Box		1

© 2022, Laguna Tools, Inc.

87	PTSF236110175-0130-87	Worm Gear		1
88	PTSF236110175-0130-88	Ball Bearing	6201	1
89	PTSF236110175-0130-89	Retaining Ring	RTW-32	1
90	PTSF236110175-0130-90	Gear		1
91	PTSF236110175-0130-91	Flat Washer	5.5*22*2.0t	1
92	PTSF236110175-0130-92	Hex. Screw	M5*0.8P*12	1
93	PTSF236110175-0130-93	Cap Screw	M8*1.25P*45	2
94	PTSF236110175-0130-94	Worm Shaft		1
95	PTSF236110175-0130-95	Set Screw	M6*1.0P*6	3
96	PTSF236110175-0130-96	Key	4*4*20	1
97	PTSF236110175-0130-97	Ball Bearing	6005	1
98	PTSF236110175-0130-98	Retaining Ring	STW-25	1
99	PTSF236110175-0130-99	Retaining Ring	STW-13	1
100	PTSF236110175-0130-100	Retaining Ring	RTW-47	1
101	PTSF236110175-0130-101	Shaft		1
102	PTSF236110175-0130-102	Bushing		1
103	PTSF236110175-0130-103	Pan Head Screw	M6*1.0P*16	4
104	PTSF236110175-0130-104	Motor Cover		1
105	PTSF236110175-0130-105	Trunnion Support		2
106	PTSF236110175-0130-106	Hex. Screw	M8*1.25P*25	4
108	PTSF236110175-0130-108	Hex Nut	M6*1.0P(10B*5H)	2
109	PTSF236110175-0130-109	Hex. Screw	M6*1.0P*25	2
110	PTSF236110175-0130-110	Strain Relief	SB7R-1	1
111	PTSF236110175-0130-111	Flat Washer	4.3*10*1.0t	2
112	PTSF236110175-0130-112	Pan Head Screw	M4*0.7P*8	2
113	PTSF236110175-0130-113	Knob	5/16"-18NC*3/4"	2
114	PTSF236110175-0130-114	Hex. Screw	M8*1.25P*60	2
115	PTSF236110175-0130-115	Wheel		2
116	PTSF236110175-0130-116	Flat Washer	6.3*13*1.0t	4
117	PTSF236110175-0130-117	Leveling Foot		2
118	PTSF236110175-0130-118	Slide Shelf		2
119	PTSF236110175-0130-119	Hex Screw w/Washer	M8*1.25P*12/(13B*6.5H)	2
120	PTSF236110175-0130-120	Storage Box		1
121	PTSF236110175-0130-121	Round Head Screw w/Washer	M6*1.0P*10/6*13.2*1.0t	6
122	PTSF236110175-0130-122	Fix Plate		1
123	PTSF236110175-0130-123	Worm Shaft Bracket		1
124	PTSF236110175-0130-124	Magnetic Switch Assembly	120V CSA for MTSF236110175-0130	1
124	PTSF236110175-0130-124-1	Magnetic Switch Assembly	220V CSA for MTSF236110175-0130	1
127	PTSF236110175-0130-127	36" Rail Assembly		1
127.1	PTSF236110175-0130-127.1	CAP Screw w/ Spring Washer	M8*1.25P*20/8.2*15.4	3
127.2	PTSF236110175-0130-127.2	Flat Washer	8.5*16*2.0t	6
127.3	PTSF236110175-0130-127.3	Hex Nut	M8*1.25P(13B*6.5H)	6
127.4	PTSF236110175-0130-127.4	Square Bolt	M8*1.25P*20	3
127.5	PTSF236110175-0130-127.5	Rear Rail		1
127.6	PTSF236110175-0130-127.6	Front Rail Assembly	36"	1
130	PTSF236110175-0130-130	Push Sticks		1
133	PTSF236110175-0130-133	Hex. Wrench	2.5mm	1
134	PTSF236110175-0130-134	Hex. Wrench	6mm	1
135	PTSF236110175-0130-135	Open Wrench	8*10	1
136	PTSF236110175-0130-136	Open Wrench	11*13	1
137	PTSF236110175-0130-137	Arbor Wrench		1

© 2022, Laguna Tools, Inc.

145	PTSF236110175-0130-145	Stand		1
146	PTSF236110175-0130-146	Strain Relief	PGA13.5-11B	1
147	PTSF236110175-0130-147	Bushing	for MTSF236110175-0130 only	4
148	PTSF236110175-0130-148	#N/A		1
150	PTSF236110175-0130-150	Handle	for MTSF236110175-0130 only	2
151	PTSF236110175-0130-151	Set Screw	M5*0.8P*12	2
152	PTSF236110175-0130-152	Key	4*4*12	2
153	PTSF236110175-0130-153	Hex Screw w/Washer	M8*1.25P*16/(13B*6.5H)	1
154	PTSF236110175-0130-154	Adjusting Bushing		1
155	PTSF236110175-0130-155	Set Screw	M5*0.8P*5	1
159	PTSF236110175-0130-159	Retaining Ring	STW-10	1
160	PTSF236110175-0130-160	O-Ring	P11	1
162	PTSF236110175-0130-162	Spring Pin	3*10	1
166	PTSF236110175-0130-166	Hook		1
167	PTSF236110175-0130-167	Knob		1
168	PTSF236110175-0130-168	Spring		1
169	PTSF236110175-0130-169	Flat Washer	5.2*12*1.5t	1
170	PTSF236110175-0130-170	Lock Nut	M5*0.8P(8B*6H)	1
171	PTSF236110175-0130-171	Round Head Screw	M5*2.12P*12	2
***125**	PTSF236110175-0130-*125	Power Cord	SJT14AWG*3C*2550mm	1
1.7.1	PTSF236110175-0130-1.7.1	Front Rail		1
1.7.2	PTSF236110175-0130-1.7.2	Scale	52"	1
1.7.3	PTSF236110175-0130-1.7.3	End Cap — Left		1
1.7.4	PTSF236110175-0130-1.7.4	End Cap — Right		1
1.7.5	PTSF236110175-0130-1.7.5	Round Head Screw	M4*1.59P*12	4
OP	PTSF236110175-0130-OP	52" Rail with Right Table Assembly		1
172	000002-101	Flat Washer	5.2x12x1.5	1
173	006001-033	Flat Washer	6.7x16x1	2
174	008603-100	Nut	M6-1.0 (10Bx5H)	2
175	041502-010	Plastic Paper	750x1400x0.1	1
176	006001-045	Flat Washer	8.5x16x1.0	1
178	251418-615	Adaptor		1
179	000303-104	Pan Head Screw	M5-0.8x12	3
181	002504-102	Round Head Hex. Lock Screw	M4-0.7x6	4
182	006702-100	Wave Washer	WW-8	4
185	174672-902	Motor Bracket		1
186	000801-103	Round Head Screw	M6-1.0x16	1
187	000701-102	Flat Head Screw	M5-0.8x10	2
188	000003-102	Hex. Screw	M8-1.25x16	4
189	174711-000	Fix Plate		2
190	200108-000	Sponge		1
191	174772-000	Chip Bracket		1
192	130396-000	Bushing		2
193	924854-000	Over Head Guard Assembly	36”	1
.1	042620-015	Clamp & Dust Hose	1.5” (O.D) 2700mm	1
.2	174887-904	Brace	1	1
.5	850913-000	Hardware Bag for Over Head Guard	36”	1
.5.1	001803-103	CAP Screw w/ Spring Washer	M8-1.25x25/8.2x13.7	1
.5.2	006001-049	Flat Washer	8.5x16x2	1
.5.3	008006-100	Hex Nut	M8-1.25 (13Bx5H)	1
.5.4	042622-003	Clamp	30-45 (O.D.)	2

© 2022, Laguna Tools, Inc.

194	174239-904	Wire Clamp	M6	1
195	000304-102	Pan Head Screw	M6-1.0x10	2
196	950848-000	Tilt DRO Assembly		1
197	000805-101	Round Head Screw	M4-0.7x6	4
198	491221-000	Plate		1
199	175025-000	Fixed Plate		1
200	000301-201	Pan Head Screw	M3-0.5x6	1
201	000102-103	Cap Screw	M5-0.8x10	1
202	021801-000	Wire Clamp	NB-1722	2
203	474048-018	Cord	24 AWG/4C/550mm	1
204	000302-101	Pan Head Screw	M4-0.7x6	2
205	006501-100	Internal Tooth Lock Washer	4.3x8.5 (BW-4)	2
206	002504-701	Round Head Socket Lock Screw	M4-0.7x10	1
207	006003-199	Flat Washer	4.3x14x2	1

© 2022, Laguna Tools, Inc.

Notes

© 2022, Laguna Tools, Inc.

LAGUNA

MTSF236110175-0130
MTSF252110175-0130

- *Precision ground mirrored tabletop.*
- *Quick release blade attachments.*
- *Integrated mobility and storage.*
- *Quick blade changes with the push button blade lock.*
- *Single poly V-ribbed belt and double sealed large bearings.*
- *Reliable totally enclosed fan cooled AC Induction motor.*

The new Laguna F2 Table Saws are unlike any saw on the market. Having the same quality demands earned through the original fusion table saw, the new fusion line will not only impress but exceed the expectations you have come to expect from Laguna. With a completely redesigned trunnion and arbor controls that focus on buttery smooth movements, continuous accuracy, and longevity of the saw - we are sure this is the saw that will give you the perfect rip cut for many years.

- *Newly designed precision arbor mounted directly to cabinet top. Height adjustment moves straight up easily with mechanical assist. Arbor tilt is now on 2:1 ratio gear box. The new Laguna arbor is sturdy and built to last.*
- *Designed for user adjustability. Every accessory and control is adjustable to ensure the saw is always accurate.*

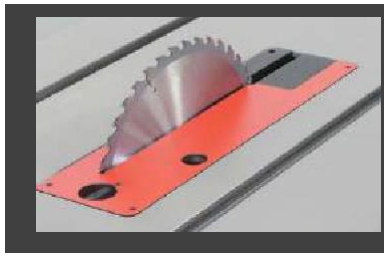

Fusion accessories

MTSF236110175
Fusion 2 Tablesaw

MTSfUSION52rip-0130
Fusion 52" Rip Extension

Laguna Blades
Alternate Top Bevel
Triple Chip
Glue Line Rip
Combination
8" Professional Dado Set

Throat Plates
One throat plate for all. Use for 8" dado and 10" blades.
PTSF236110175-0130-6

See More at Laguna tools .com

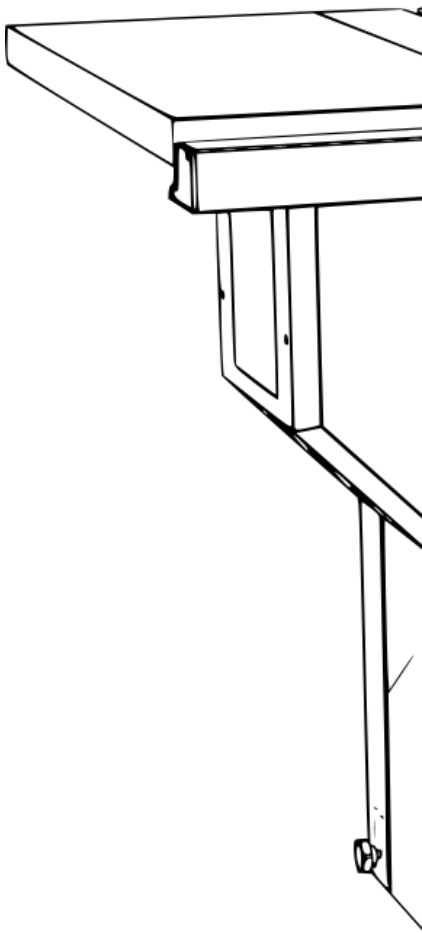

Designed in California

Laguna Tools is not responsible for errors or omissions.
Specifications subject to change. Machines may be shown with optional accessories.
© 2022, Laguna Tools, Inc. LAGUNA® and the LAGUNA Logo® are the registered trademarks of Laguna Tools, Inc. All rights reserved.
121322